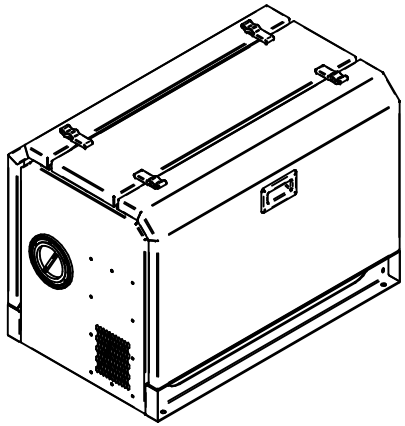

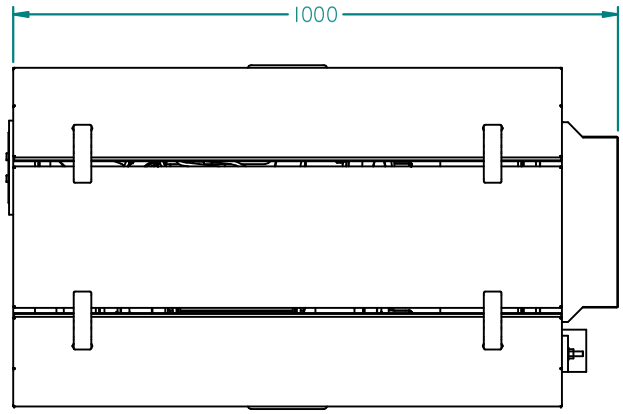

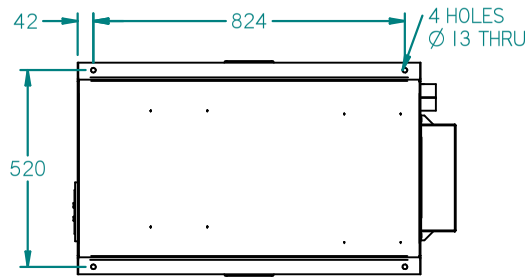

BOLTING DOWN HOLES

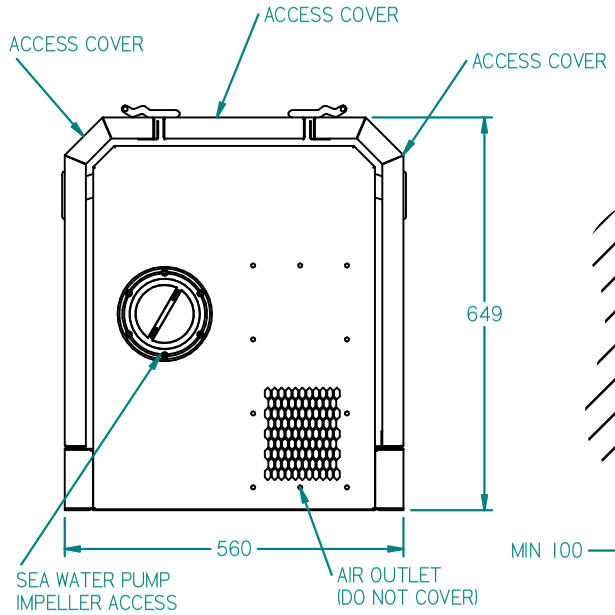

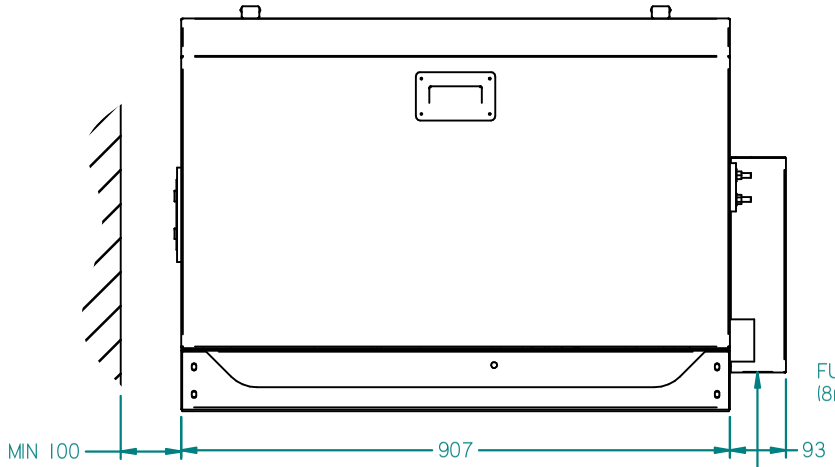

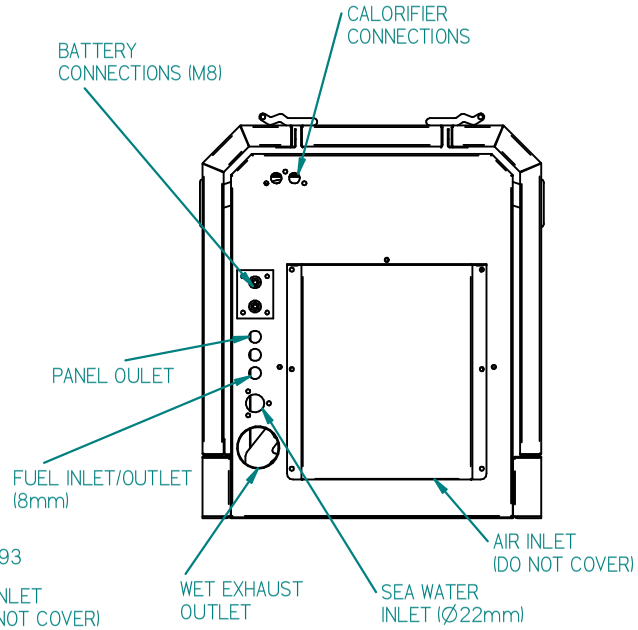

REV	DESCRIPTION	DATE	APP'D	DRAWN
01				

NOTES (NPE31-D)

TITLE:

BETAGEN 11-2
HEAT EXCHANGE

DIMENSIONS IN MM (INCH)
DO NOT SCALE

PART FILE NAME: BETAGEN 11-2 BD722 HE NPE31-D-2.asm

BETA MARINE
TEL: (01452) 723492 FAX: (01452) 729916
BETA MARINE LTD,
DAVY WAY,
WATERWELLS,
QUEDGELEY,
GLOUCESTER. GL2 2AD, UK

DRAWN BY:	SIZE	DWG NO:	REV
TW	A4	100-09185	00
CHECKED BY: LT	SCALE NTS	PAGE 1 of 1	DATE 17/03/2011