STEYRMOTORS
INNOVATION WITH LIGHTNESS

STEYR MARINE ENGINES

SE266 S36 MARINE

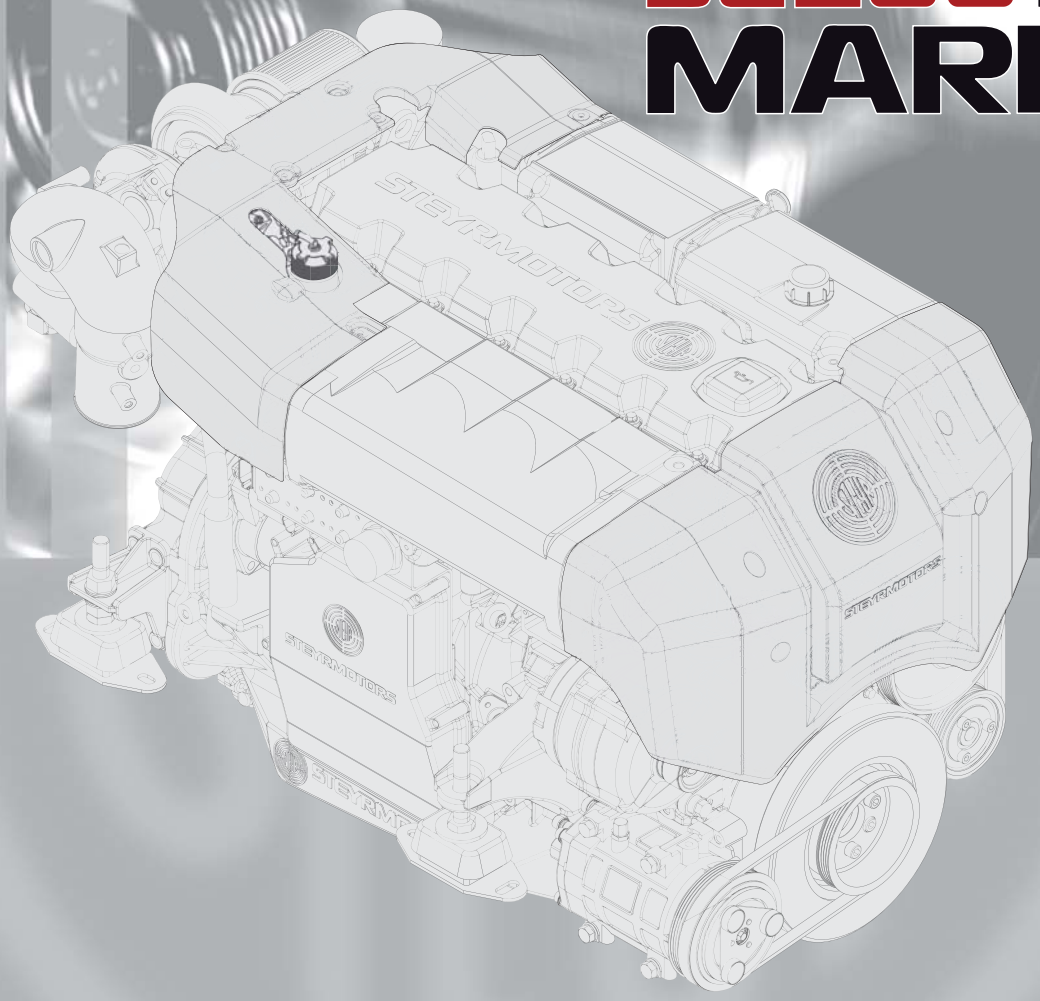

SE266S36

Serial no.: 682320001-->

SPARE PARTS CATALOGUE

P/N Z011847-0 2nd Edition, February 2015

TEL ++43 / 7252 / 222 / 20 **FAX** ++43 / 7252 / 222 / 29 **@** e.sales@steyr-motors.com

www.steyr-motors.com

STEYR MOTORS GmbH
Im Stadtgut B1, A-4407 Steyr-Gleink, AUSTRIA

When ordering spare parts are always indicate model and engine number.
This will speed up delivery and help to avoid mistakes.

The primary model and engine number is located on the engine as illustrated. These numbers are required when requesting warranty and ordering parts.

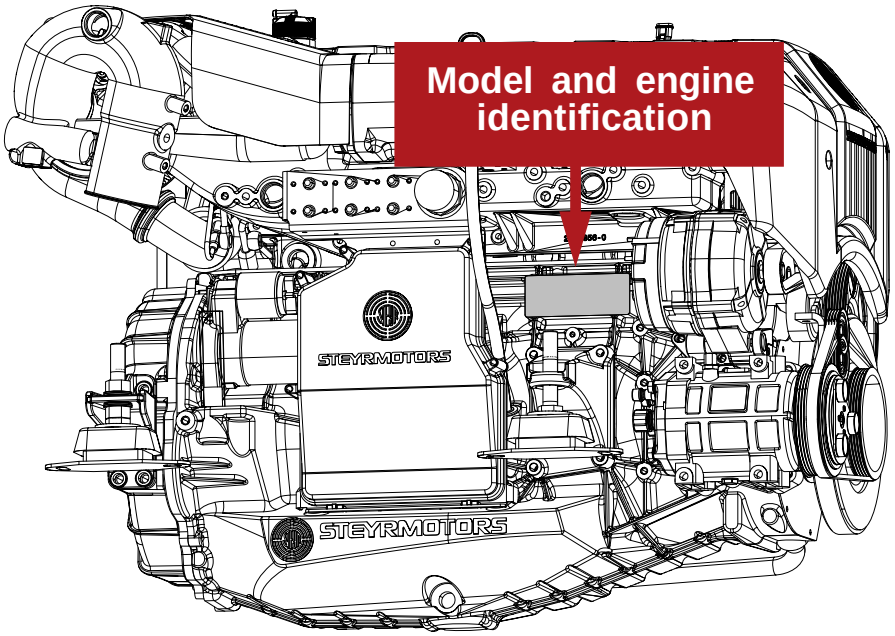

Substituting automotive or generally supplied parts and hardware will often result in less than desired performance. For this reason, you should insist on the known quality of genuine STEYR Marine matched replacement parts, and should never use parts of unknown quality.

We reserve the right to make changes in design and execution which incorporate advances in technology!

SIGNS AND SYMBOLS

1

STEYRMOTORS
INNOVATION WITH LIGHTNESS

TA 0101

CYLINDERBLOCK

SE266 S36 MARINE

2 — 01016084-0

3 4 5 6 8 9 7

Pos.	Part.-No.	Qty	Designation	Step
10	Z002676-0	1	SPARE PART COVER T-BELT —>68226146	.1
20	2203711-1	1	COVER T-BELT, UPPER PART 68226147—>	.1
30	9000538-0	3	HEX.FLANGE BOLT EN 1665-M6x50 A2-70	.1

1 Table number

2 Partlist number for whole table/ functional groups

3 Positions number

4 Spare part number

5 Quantity for one engine respectively assembly group

6 Designation and description of spare part

7 Groupparts are marked with a circle around the position number. Parts in the list below these, which had an increased step number by one, will be included at delivery.

8 **—> 6.....** Arrow before engine number: Spare part UNTIL and LOWER

9 **6..... —>** Arrow past engine number: Spare part FROM and HIGHER

ACROBAT

... back to "starting point"

... one page back

... one page forward

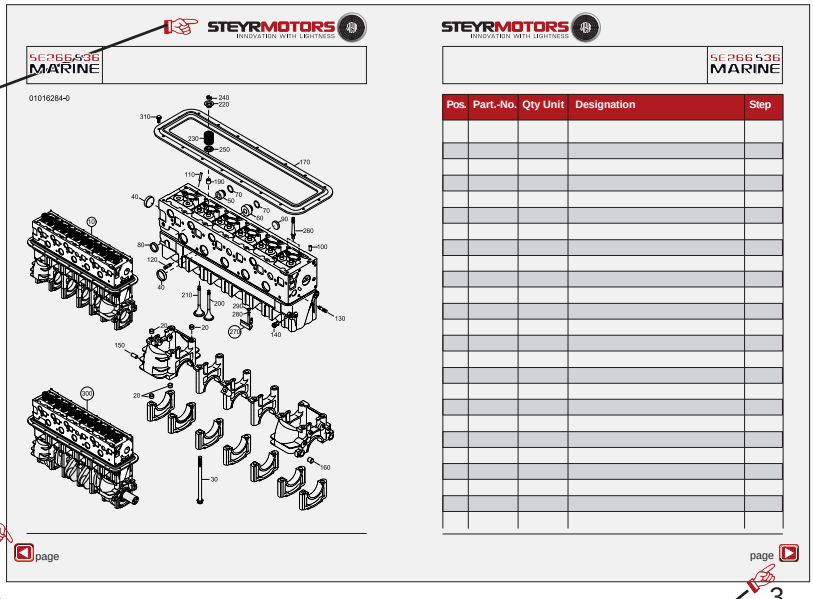

SE266 S36 MARINE

TABLE OF CONTENTS - SPARE PARTS CATALOGUE

TA 0100 Page 10
MOUNT BRACKET, COVER T-BELT, GASKET SET

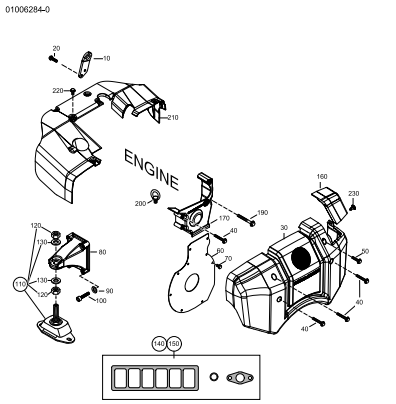

TA 0101 Page 12
CRANKCASE

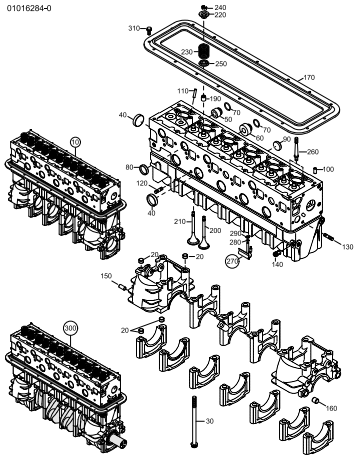

TA 0102 Page 14
CRANKSHAFT, BEARING, DAMPER

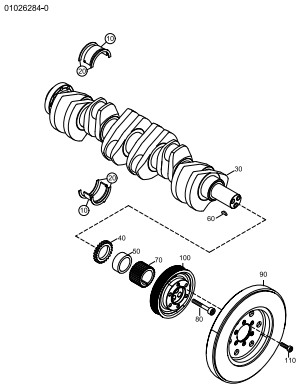

TA 0103 Page 16
FLYWHEEL, FLYWHEELHOUSING

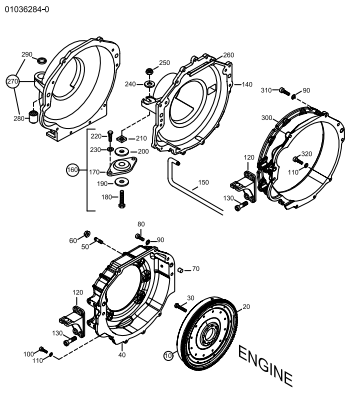

TA 0104 Page 20
PISTON, RINGS AND PIN, CONNECTION ROD

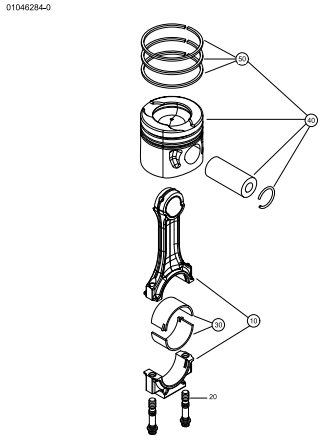

TA 0105 Page 22
CAMSHAFT HOUSING

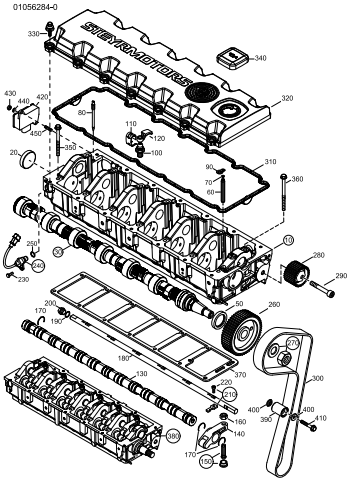

TA 0106 Page 26
OILPUMP, OILPIPE, OILPAN, OIL DIPSTICK

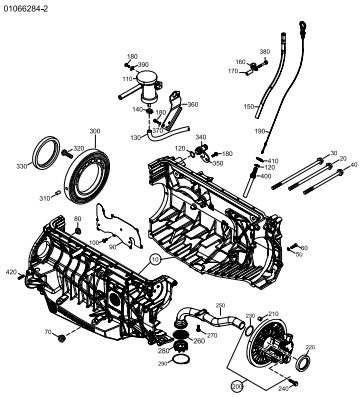

TA 0108 Page 30
INTERCOOLER

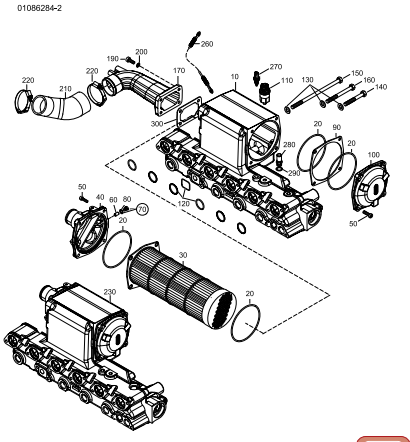

TA 0109 Page 32
POWER TAKE OFF FRONT

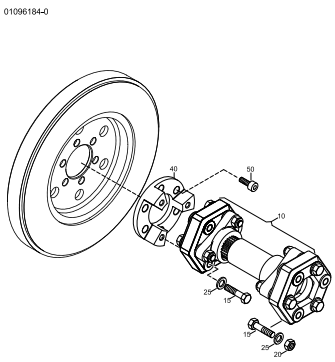

STEYRMOTORS
INNOVATION WITH LIGHTNESS

TABLE OF CONTENTS - SPARE PARTS CATALOGUE

SE266 S36 MARINE

TA 0113 Page 34 OILCOOLER, OILFILTER	TA 0114 Page 36 EXHAUST, HEAT EXCHANGER -->683240974	TA 0114 Page 40 EXHAUST, HEAT EXCHANGER 682340975-->
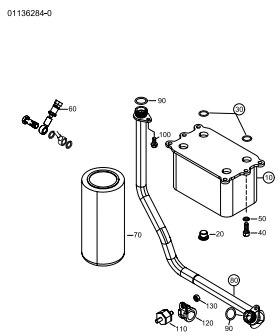	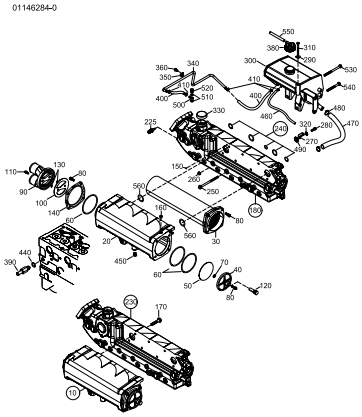	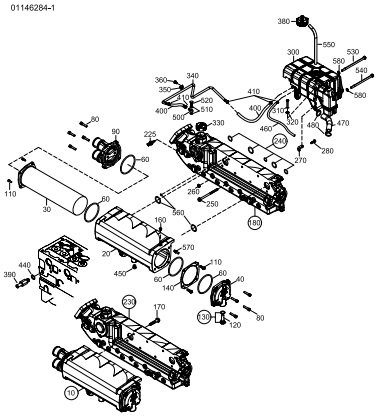
TA 0200 Page 44 TORSIONAL COUPLING	TA 0210 Page 46 COUPLER	TA 0302 Page 48 FUEL PUMP, UNIT INJECTOR, PIPE
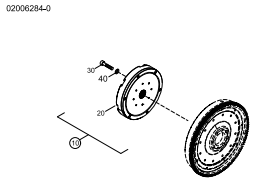	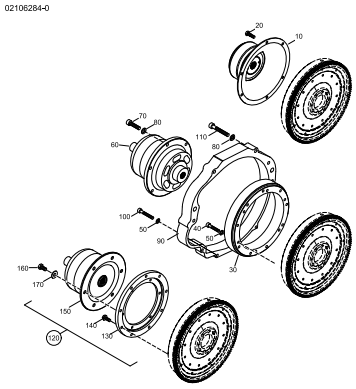	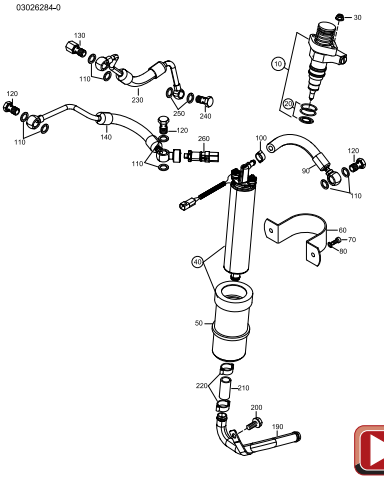
TA 0304 Page 50 AIRFILTER, INVERSIONVALVE SOLAS	TA 0305 Page 52 TURBO	TA 0308 Page 54 CONTR. SOLENOID, INJECTION TIMIMG DEVICE
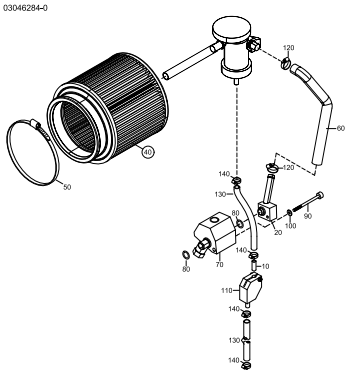	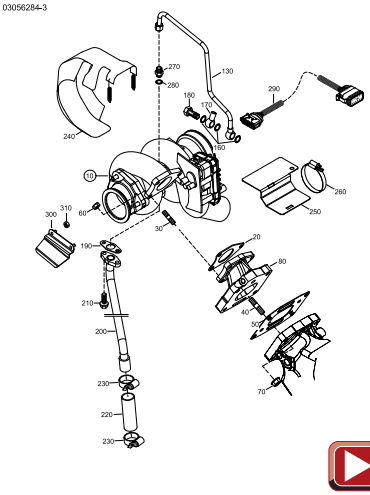	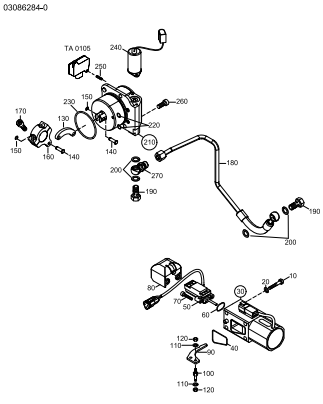

SE266 S36
MARINE

TABLE OF CONTENTS - SPARE PARTS CATALOGUE

TA 0309 Page 56
FUEL FILTER

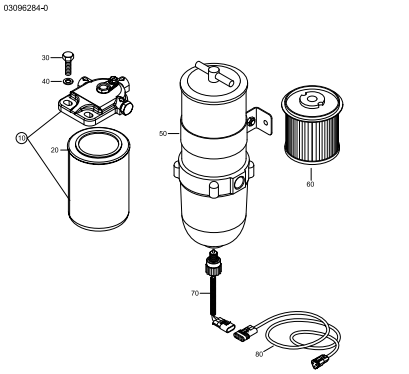

TA 0311 Page 58
GLOW PIN

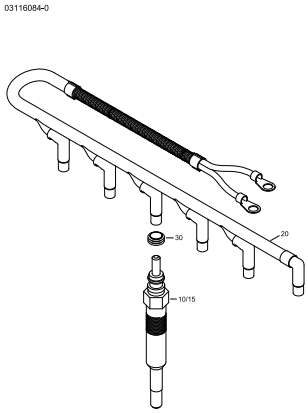

TA 0312 Page 60
POTENTIOMETER ACCELERATOR

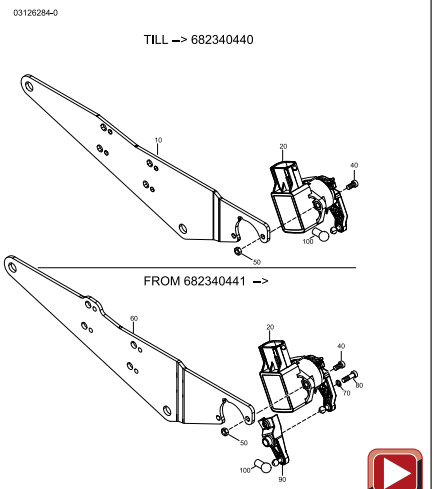

TA 0401 Page 62
HIGH RISER, EXHAUSTPIPE

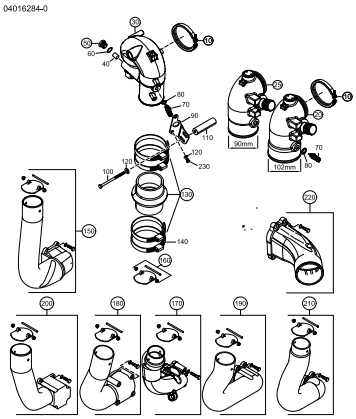

TA 0503 Page 64
WATERPIPE, THERMOSTAT

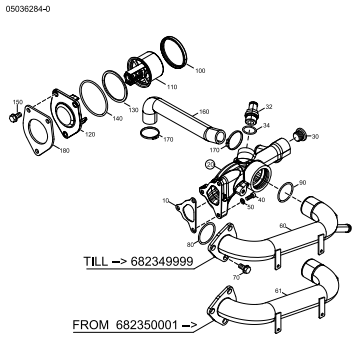

TA 0504 Page 66
WATERPUMP

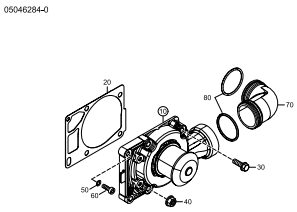

TA 0505 Page 68
DRIVE BELTS, PULLEYS, TENSIONER

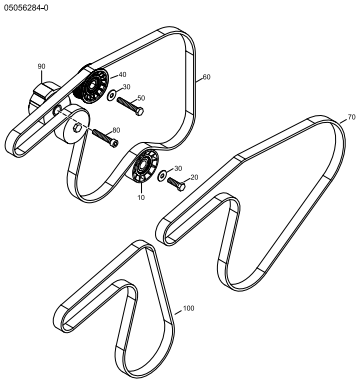

TA 0510 Page 70
RAW WATER PUMP

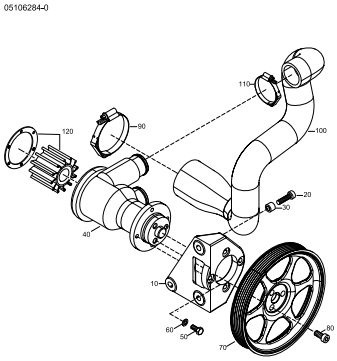

TA 0512 Page 72
RAW WATER PIPES

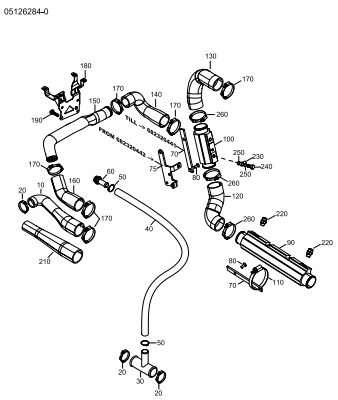

TABLE OF CONTENTS - SPARE PARTS CATALOGUE

SE266 S36 MARINE

TA 0601 Page 74
ALTERNATOR 14V - 120A

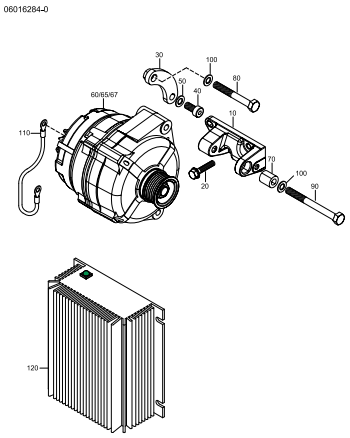

TA 0603 Page 76
STARTER

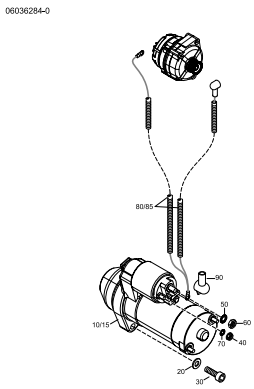

TA 0605 Page 78
ENGINE HARNESS

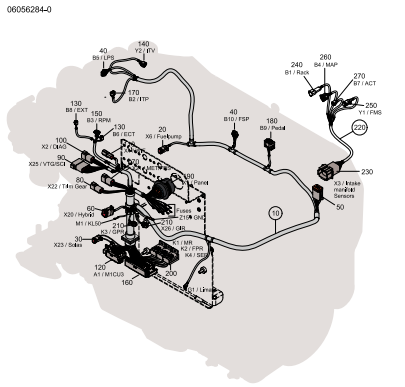

TA 0606 Page 80
SECURETYSYSTEM, FUSES, ECU, E-BOX

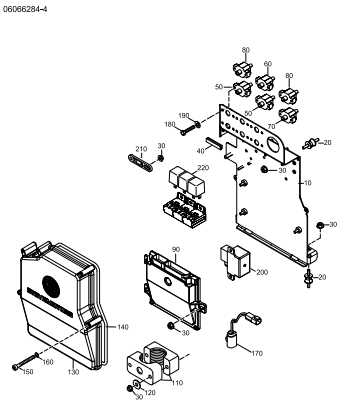

TA 0607 Page 82
INSTRUMENTPANEL (2010 - 2013/08)

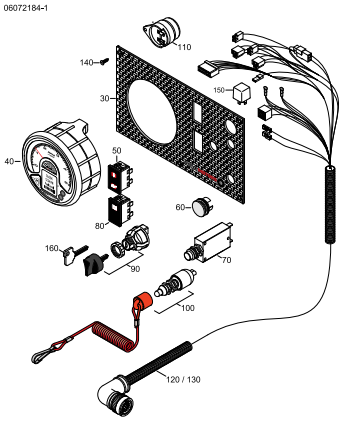

TA 0607 Page 84
INSTRUMENTPANEL (FROM 2013/08 -->)

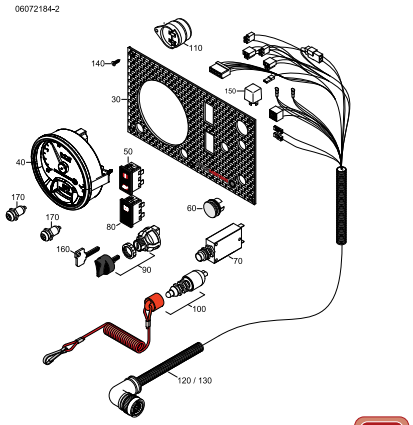

TA 0609 Page 86
INSTRUMENTPANEL SOLAS (2010 - 2013/08)

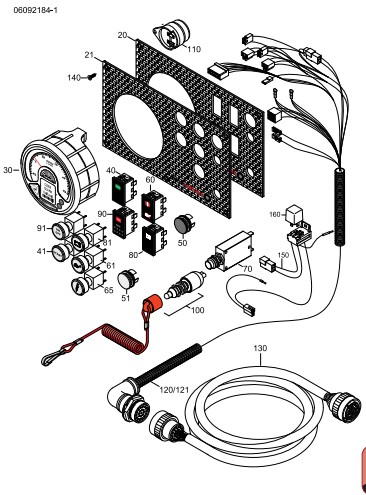

TA 0609 Page 88
INSTRUMENTPANEL SOLAS (FROM 2013/08-->)

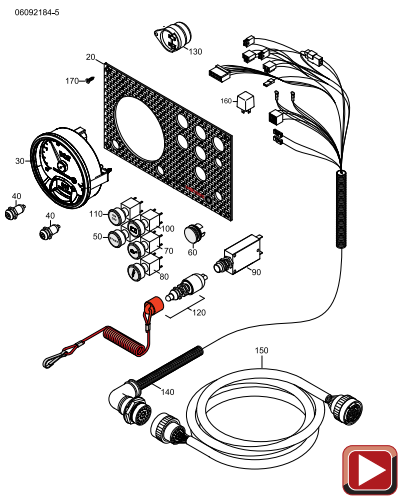

TA 0610 Page 90
SCC-DISPLAY

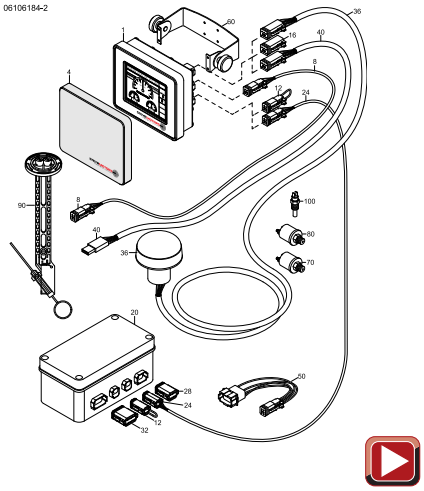

SE266 S36 MARINE

TABLE OF CONTENTS - SPARE PARTS CATALOGUE

TA 0611 Page 92
SWITCH PANEL FOR DISPLAY

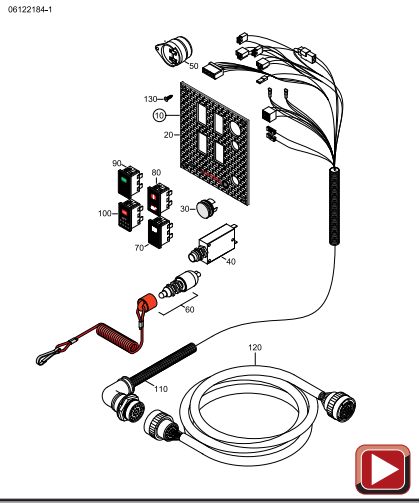

TA 0612 Page 94
PUSH BUTTON PANEL SOLAS FOR DISPLAY

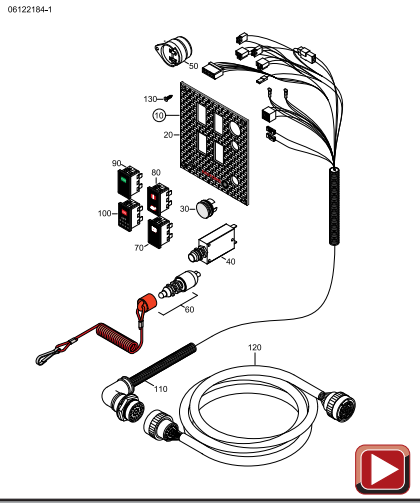

TA 0613 Page 96
EXTENSION CABLE INSTRUMENTS

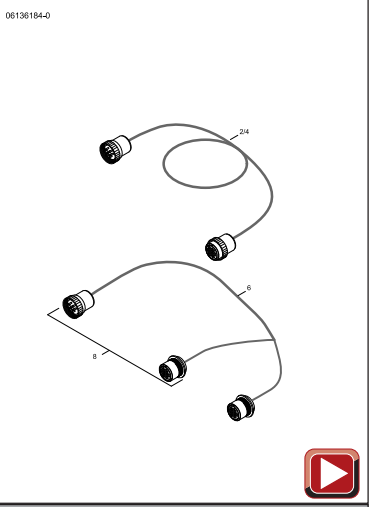

TA 0700 Page 98
TRANSMISSION

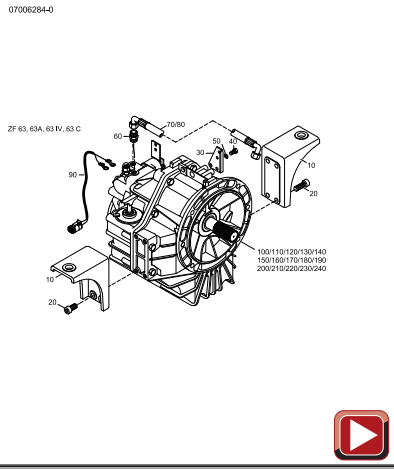

TA 0701 Page 100
TRANSMISSION-SHAFT, PTO-SHAFT

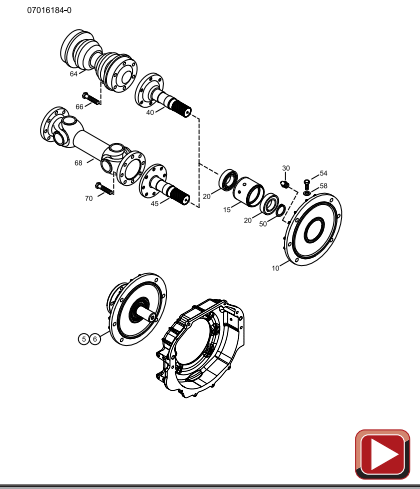

TA 0720 Page 102
DRIVE ADAPTOR VOLVO STERNDRIVE

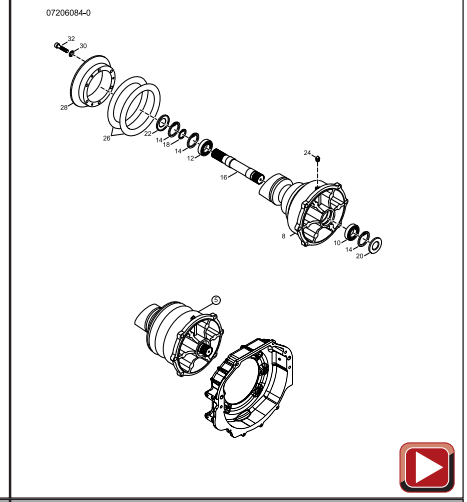

TA 0730 Page 104
DRIVE SHAFT EXT. MERCURY STERNDRIVE

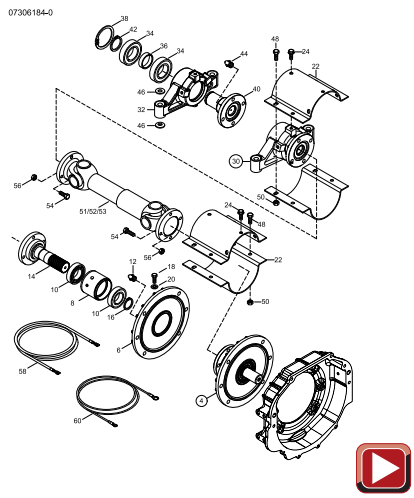

TA 1408 Page 106
HYDRAULIC PUMP

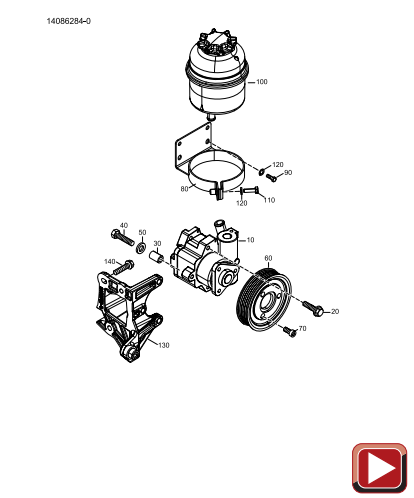

TA 1409 Page 108
HYDRAULIC PIPES

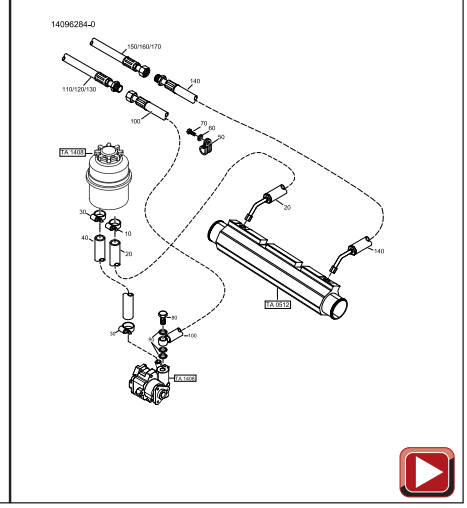

STEYRMOTORS
INNOVATION WITH LIGHTNESS

TABLE OF CONTENTS - SPARE PARTS CATALOGUE

SE266 S36 MARINE

TA 2207 Page 110
ENGINE PREHEATING

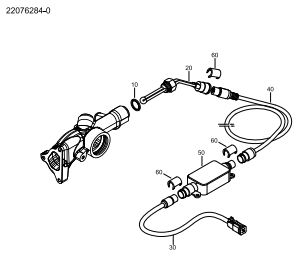

TA 4000 Page 112
INTEGR. FLYWHEELGENERATOR (IFG)

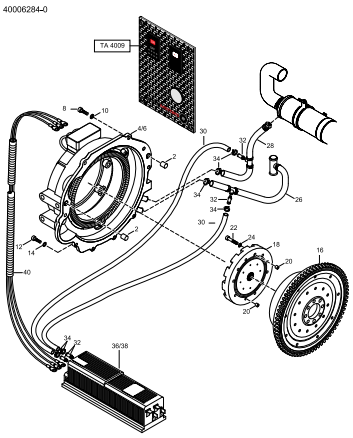

TA 4000 Page 114
IFG DUAL CIRCUIT COOLING

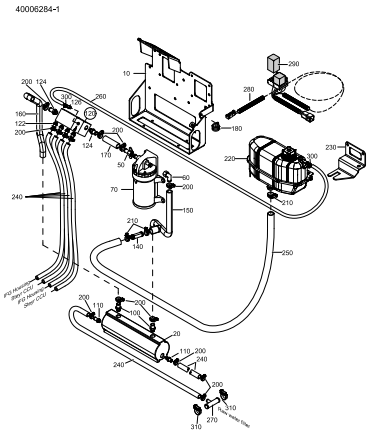

TA 4009 Page 116
IFG PUSH BUTTON PANEL

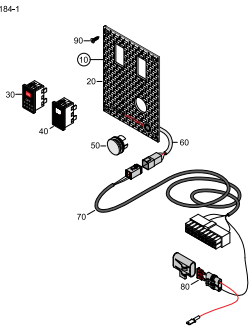

TA 4100 Page 118
HYBRID STAGE I

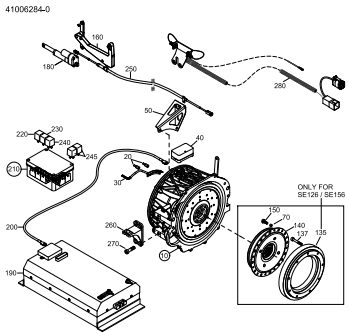

TA 5200 Page 120
AIR CONDITIONING & DRIVE

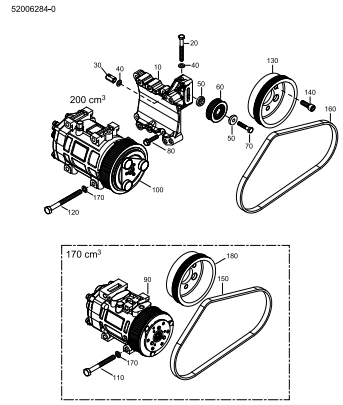

TA 5520 Page 122
OIL DRAIN PUMP

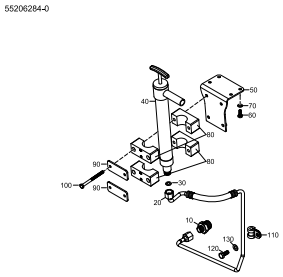

TA 6012 Page 124
CABIN HEATER, CIRCULATION PUMP

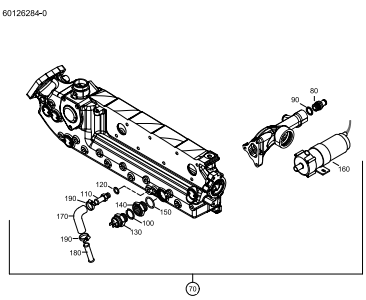

STEYRMOTORS
INNOVATION WITH LIGHTNESS

SE266 S36 MARINE

MOUNT BRACKET, COVER T-BELT, GASKET SET

01006284-0

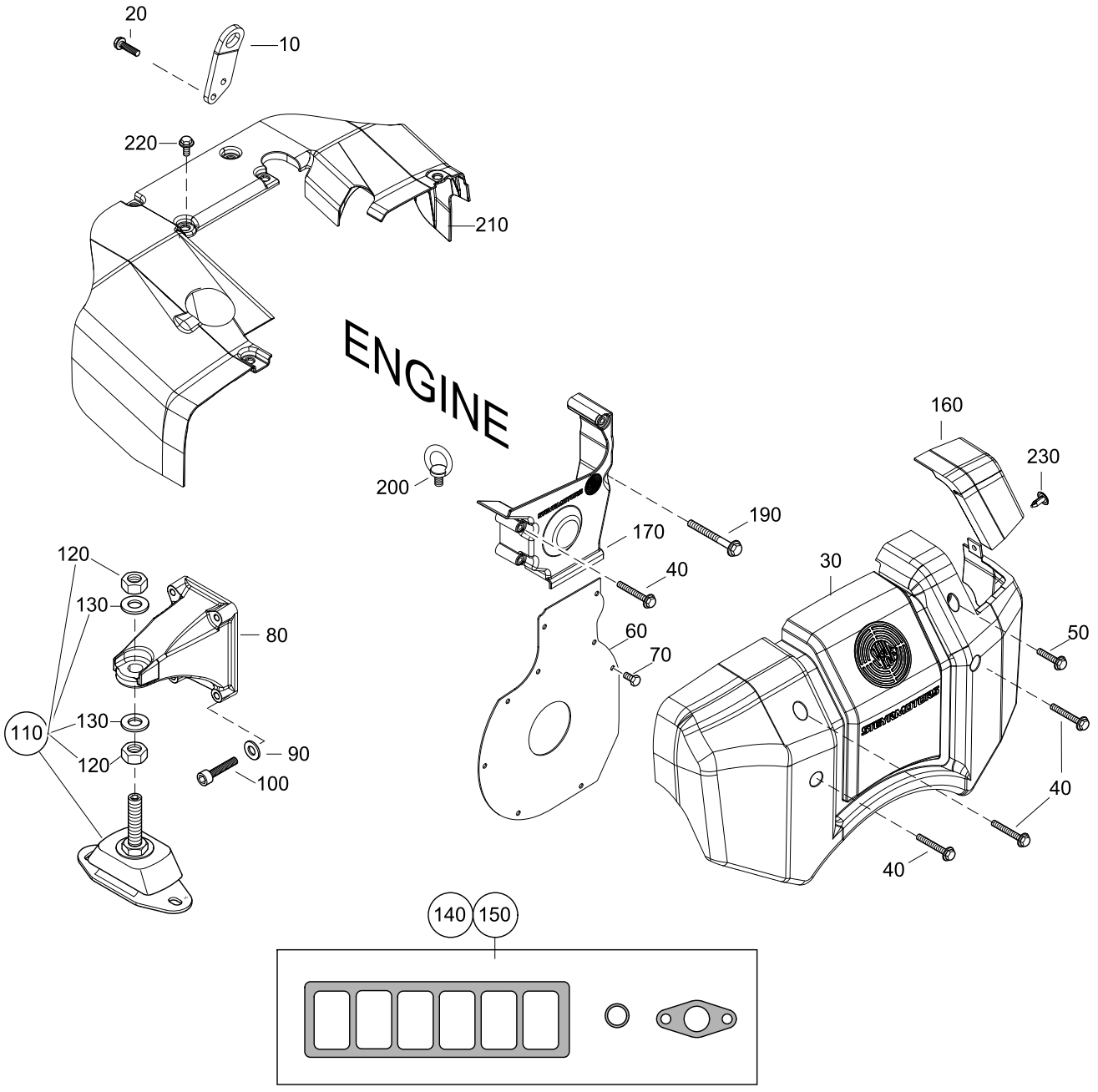

MOUNT BRACKET, COVER T-BELT, GASKET SET

SE266 S36 MARINE

01006284-0

Pos.	Part.-No.	Qty	Designation	Step
10	2201024-0	1	ENGINE LIFT SHACKLE	.1
20	9000271-0	2	HEX.FLANGE BOLT EN 1665-M8x25-10.9-DAC	.1
30	2180836-0	1	COVER T-BELT	.1
40	9000538-0	5	HEX.FLANGE BOLT EN 1665-M6x50-A2-70	.1
50	9000537-0	1	HEX.FLANGE BOLT EN 1665-M6x30-A2-70	.1
60	2181204-0	1	COVER PLATE, COVER T-BELT	.1
70	3800238-0	9	HEX.HD.SCR. ISO 4017-M6x12-A2-70	.1
80	2177598-9	2	MOUNT BRACKET, FRONT, PAINTED	.1
90	3930075-0	8	WASHER ISO 7089-10-140HV-A2	.1
100	9000014-1	8	HEX.SOCK. SCR. ISO 4762-M10x50-10.9-A3C	.1
110	2203804-5	4	ENGINE MOUNT ASSY 55SH	.1
120	9000442-0	2	HEX.NUT ISO 8673-M18x1,5-8-A-DAC	..2
130	9000441-0	2	LOCKWASHER 19,5x34,5	..2
140	Z026130-0	1	SEAL KIT, W-O FRAME SEAL	.1
150	Z026132-0	1	SEAL KIT, WITH FRAME SEAL	.1
160	2181029-0	1	COVER T-BELT PART 2	.1
170	2181026-0	1	COVER T-BELT, LOWER PART	.1
190	9001104-0	1	HEX. BOLT ISO 4014-M6x70 A2-70	.1
200	9001105-0	1	RING BOLT DIN 580-M12-A2	.1
210	2180838-0	1	COVER REAR	.1
220	9001001-0	6	HEX.FLANGE BOLT EN 1665-M6x16-A2-70	.1
230	9001126-0	1	UNSCREWING SNAP RIVET 8mm	.1

SE266 S36 MARINE

CRANKCASE

01016284-0

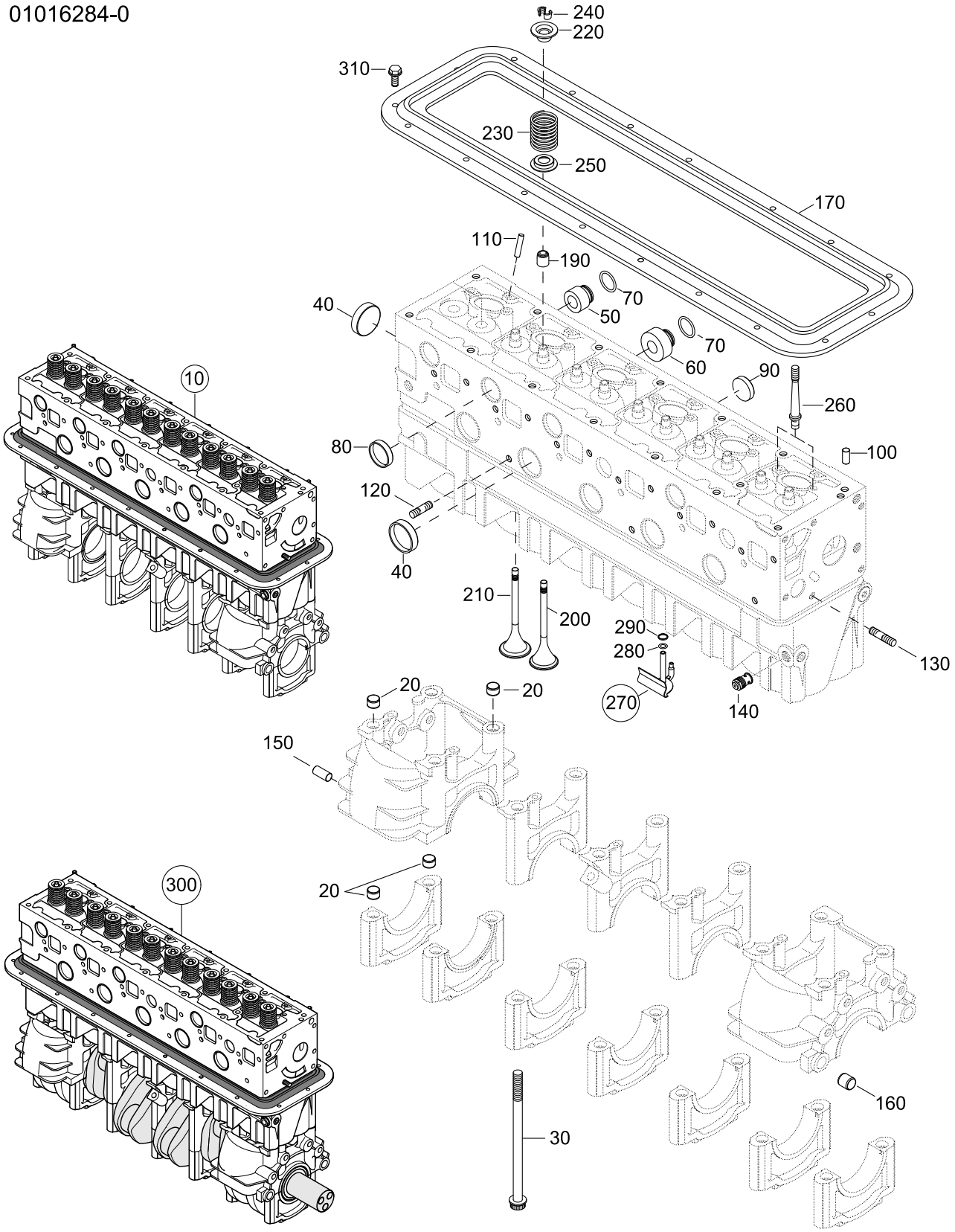

CRANKCASE

SE266 S36 MARINE

01016284-0

Pos.	Part.-No.	Qty	Designation	Step
10	MZ60284-0	1	CYL. BLOCK ASSY. MARINE (INCL. VALVES)	.1
20	2172799-0	24	FITTING SLEEVE	..2
30	2174329-0	14	BOLT, MAIN BEARING	..2
40	2170309-0	6	CORE HOLE PLUG 40-8	..2
50	2180872-0	2	O-RING SLEEVE	..2
60	2180873-0	3	O-RING SLEEVE	..2
70	9001076-0	5	O-RING 19,2x3	..2
80	2172170-0	6	CORE HOLE PLUG 28-7	..2
90	2173768-0	6	CORE HOLE PLUG 22-8	..2
100	3901416-0	2	PARALLEL PIN ISO 2338-8m6x16-ST	..2
110	3901328-0	6	PARALLEL PIN ISO 2338-6m6x30-ST	..2
120	9000327-0	3	STUD DIN 939-M6x20-8.8-A2C	..2
130	3812435-0	1	STUD DIN 938-M8x35-8.8-A3C	..2
140	2178525-1	1	COOLING OIL VALVE ASSY.	..2
150	3901509-0	2	PARALLEL PIN ISO 2338-10m6x20-ST	..2
160	2170298-0	2	FITTING SLEEVE	..2
170	2205379-0	1	FRAME SEAL	..2
190	2172096-1	12	VALVE STEM SEAL	..2
200	2177577-1	6	EXHAUST VALVE	..2
210	2177576-6	6	INTAKE VALVE	..2
220	2177349-0	12	VALVE-SPRING RETAINER	..2
230	2172362-0	12	VALVE SPRING	..2
240	2170171-0	24	VALVE COLLET	..2
250	2177415-0	12	SPRING SUPPORT	..2
260	2174321-1	12	STUD	.1
270	2178478-3	6	SPRAYING NOZZLE ASSY.	.1
280	2179896-0	6	O-RING 5,23 x 2,62 (GREEN)	..2
290	2179658-0	6	BACK-UP RING	.1
300	MT60284-0	1	PARTIAL ENGINE	.1
310	9000287-0	17	HEX.FLANGE BOLT EN 1665-M6x12-8.8-A3C	.1

SE266 S36 MARINE

CRANKSHAFT, BEARING, DAMPER

01026284-0

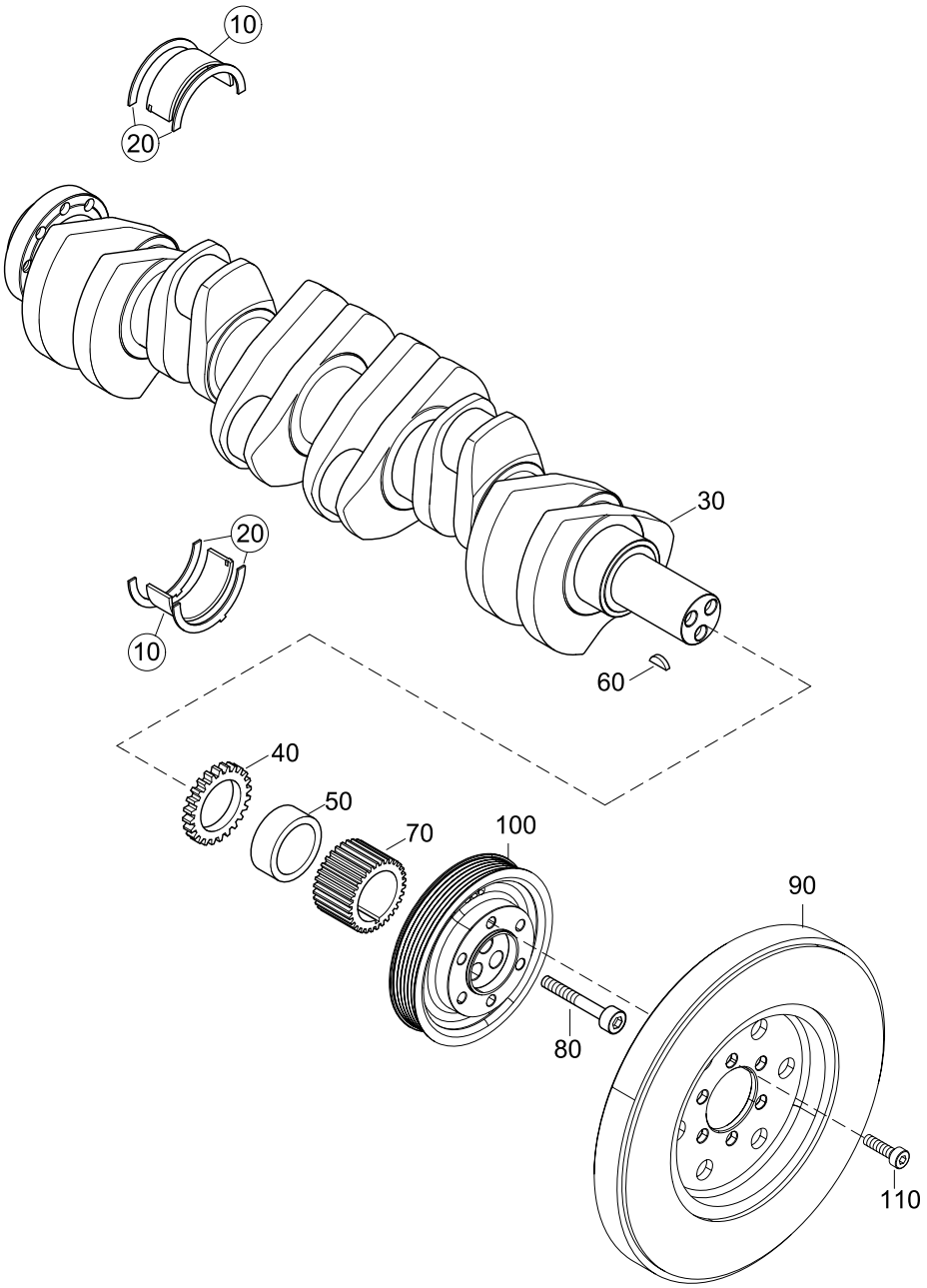

CRANKSHAFT, BEARING, DAMPER

SE266 S36
MARINE

01026284-0

Pos.	Part.-No.	Qty	Designation	Step
10	Z002185-0	7	MAIN BEARING KIT, CRANKSHAFT	.1
20	Z002002-0	1	AXIAL BEARING KIT, CRANKSHAFT	.1
30	2172816-0	1	CRANKSHAFT	.1
40	2172584-2	1	GEAR	.1
50	Z021016-0	1	BARREL RING	.1
60	3960012-0	1	WOODRUFFKEY DIN 6888-8x9	.1
70	2172770-2	1	SYNCHRONOUS BELT PULLEY	.1
80	9000635-0	3	HEX.SOCK. SCR. ISO 4762-M12x90-12.9-DAC	.1
90	2200664-2	1	VISCO DAMPER	.1
100	2180681-0	1	PULLEY, CRANKSHAFT	.1
110	9000511-0	6	HEX.SOCK. SCR. ISO 4762-M10x25-12.9	.1

SE266 S36 MARINE

FLYWHEEL, FLYWHEELHOUSING

01036284-0

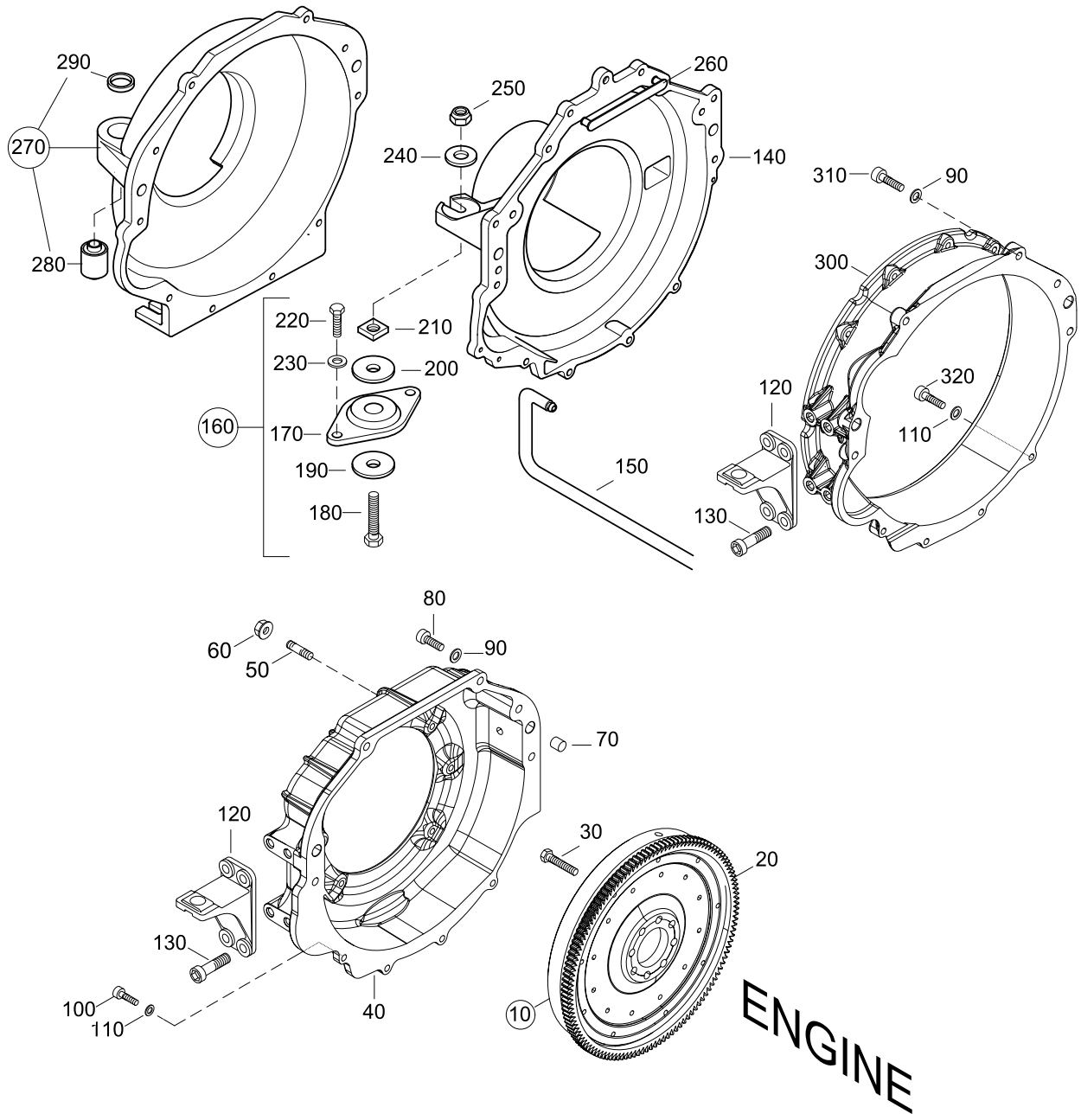

FLYWHEEL, FLYWHEELHOUSING

SE266 S36 MARINE

01036284-0

Pos.	Part.-No.	Qty	Designation	Step
10	2180676-0	1	FLYWHEEL ASSY.	.1
20	2205031-0	1	STARTER RING GEAR, FLYWHEEL	..2
30	2174592-0	8	HEX.HD.SCR. ISO 4017-M10x30-12.9	.1
40	2180981-0	1	HOUSING-FLYWHEEL INBOARD	.1
50	9000371-0	6	STUD DIN 835-M10x25-8.8-A3C	.1
60	9000042-1	6	HEX.FLANGE NUT DIN 6923-M10-8-A3C	.1
70	3900184-0	2	SPRING PIN, SLIGHT TYPE ISO 13337-16x22	.1
80	3862545-0	5	HEX.SOCK. SCR. ISO 4762-M10x35-A2-70	.1
90	3930075-0	5	WASHER ISO 7089-10-140HV-A2	.1
100	3862433-0	4	HEX.SOCK. SCR. ISO 4762-M8x30-A2-70	.1
110	3930103-0	4	WASHER ISO 7089-8-140HV-A2	.1
120	2178722-1	2	BRACKET FLYWHEEL HOUSING	.1
130	9000081-0	8	HEX.SOCK. SCR. ISO 4762-M12x35-8.8-A3C	.1
140	O915157-9	1	HOUSING-FLYWH. OMC / VOLVO SX - PAINTED	.1
150	O913787-0	1	HOSE-FLYWHEEL HOUSING	.1
160	O986712-0	1	SMALL PARTS REAR MOUNTS	.1
170	O983932-0	2	REAR MOUNT ASSY	..2
180	O318573-0	2	BOLT, REAR MOUNT	..2
190	O911780-0	2	WASHER-REAR MOUNT-LOWER	..2
200	O912889-0	2	WASHER REAR MOUNT	..2
210	O911776-0	2	SQUARE NUT-REAR MOUNT	..2
220	O309484-0	4	HEX. SCREW 3/8-16UNCx1-1/4"	..2
230	O319453-0	4	WASHER	..2
240	O911778-0	2	WASHER, REAR MOUNT	.1
250	O313623-0	2	LOCK NUT, REAR MOUNT	.1
260	2178504-0	1	COVER	.1
270	2178833-M	1	HOUSING FLYWHEEL MERCURY ASSY PAINTED	.1
280	2178876-2	2	SINENT BLOCK F. FLYWHEEL HOUSING	..2
290	2178877-0	2	WASHER-REAR MOUNT-LOWER	..2
300	2181327-0	1	HOUSING FLYWHEEL SAE 4 (PAINTED)	.1
310	3860149-0	5	HEX.SOCK. SCR. ISO 4762-M10x40-8.8-A3C	.1

SE266 S36 MARINE

FLYWHEEL, FLYWHEELHOUSING

01036284-0

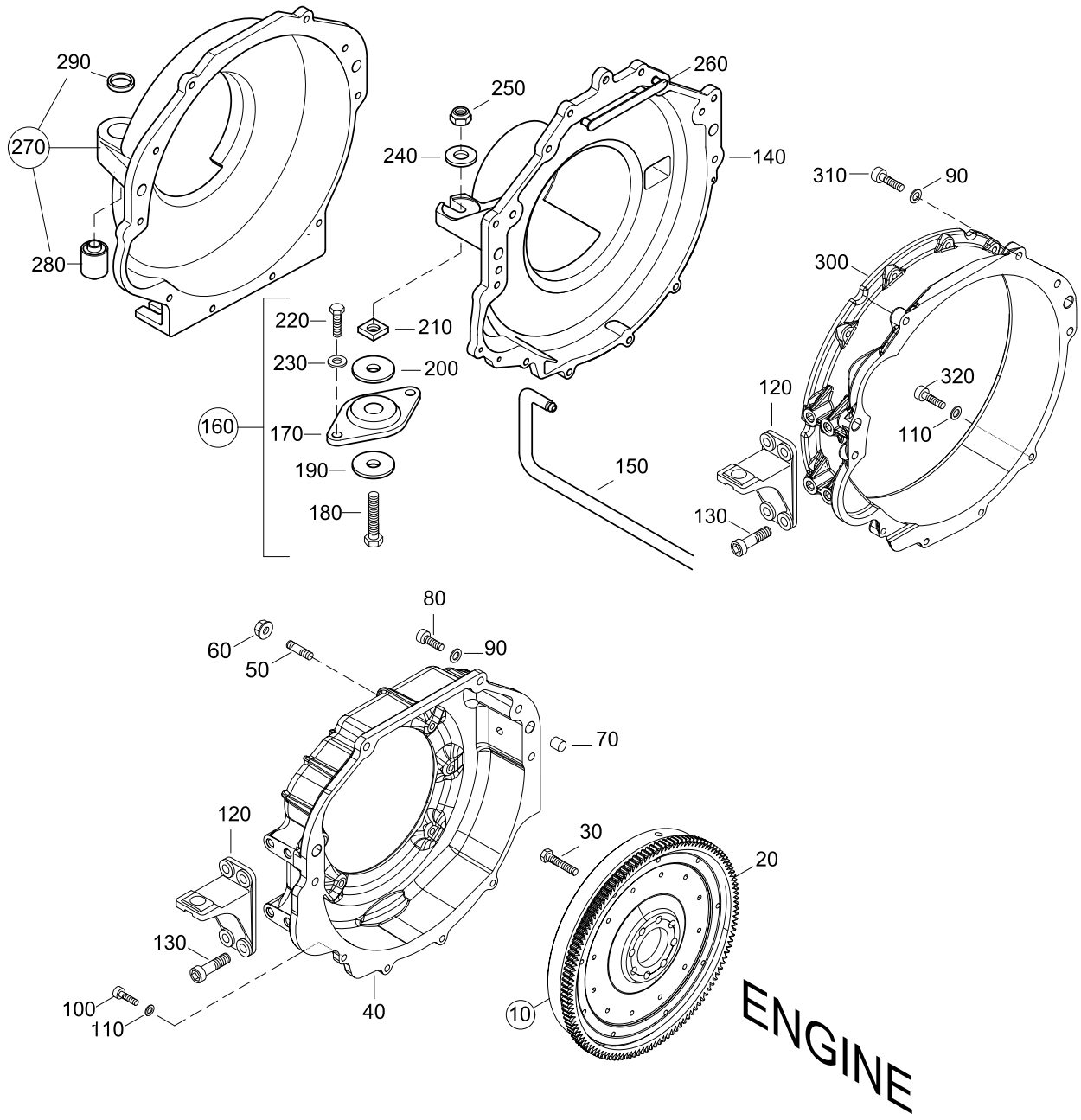

FLYWHEEL, FLYWHEELHOUSING

SE266 S36 MARINE

01036284-0

Pos.	Part.-No.	Qty	Designation	Step
320	9000064-0	4	HEX.SOCK. SCR. ISO 4762-M8x35-8.8-A3C	.1

STEYRMOTORS
INNOVATION WITH LIGHTNESS

SE266 S36 MARINE

PISTON, RINGS AND PIN, CONNECTION ROD

01046284-0

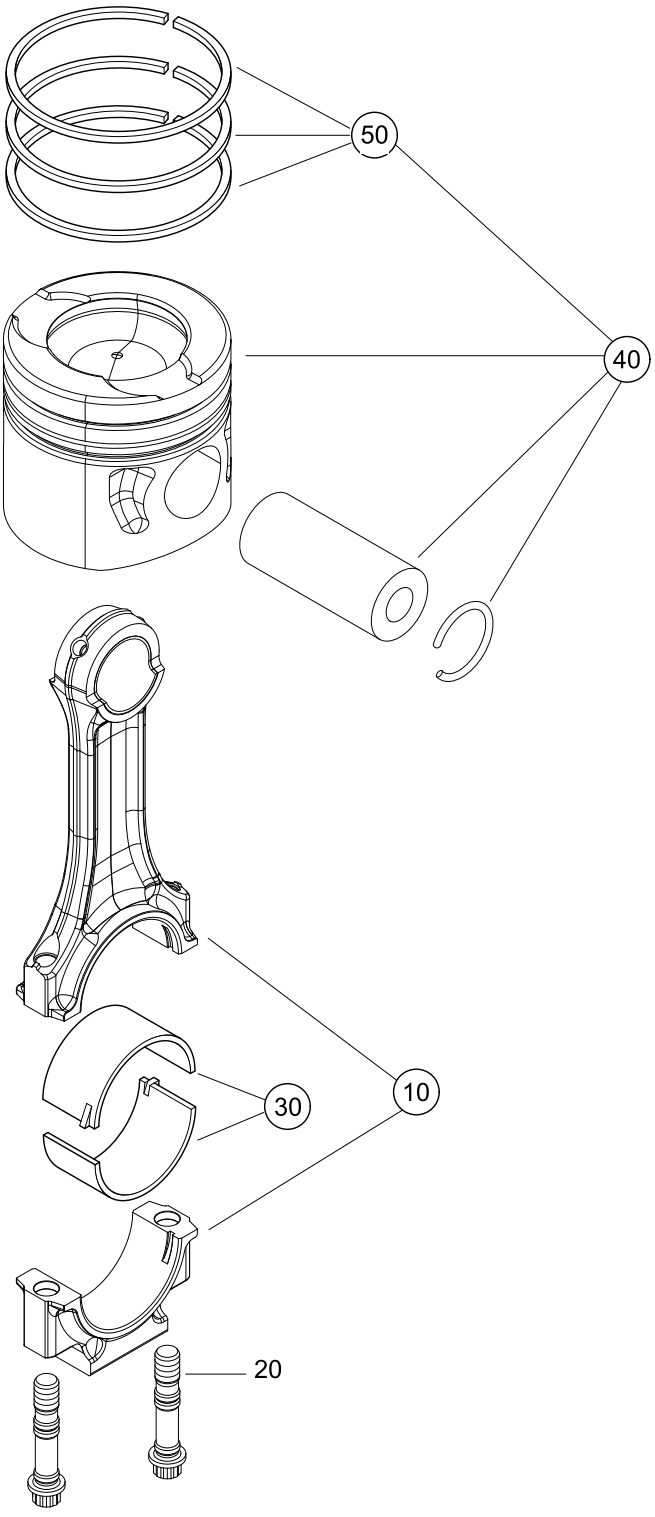

PISTON, RINGS AND PIN, CONNECTION ROD

SE266 S36 MARINE

01046284-0

Pos.	Part.-No.	Qty	Designation	Step
10	Z002181-0	6	CONNECTING ROD ASSY.	.1
20	2178532-0	2	CON ROD SCREW	..2
30	Z002182-0	6	BEARING KIT, CONNECTING ROD	.1
40	Z021015-0	6	PISTON ASSY.	.1
50	Z002060-2	1	PISTON RING KIT (1 PER PISTON)	..2

SE266 S36
MARINE

CAMSHAFT HOUSING

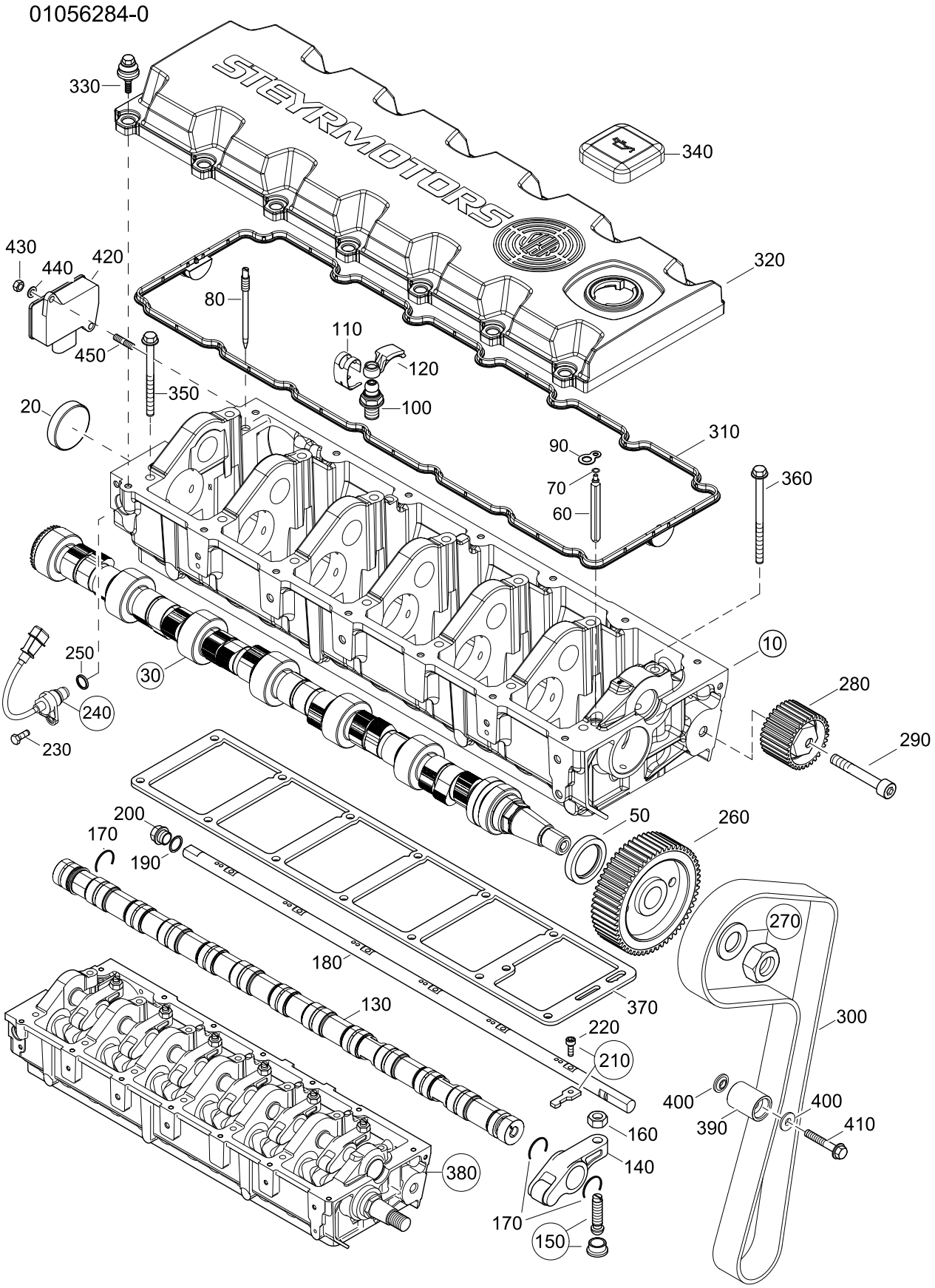

CAMSHAFT HOUSING

SE266 S36 MARINE

01056284-0

Pos.	Part.-No.	Qty	Designation	Step
10	Z026100-0	1	CAMSHAFT HOUSING ASSY.	.1
20	2178083-0	1	CORE HOLE PLUG 50-7	..2
30	2178084-3	1	CAMSHAFT ASSY.	.1
50	2172086-1	1	ROTARY SHAFT SEAL	.1
60	2178486-2	1	AXLE SUPPORT	.1
70	2179278-0	1	O-RING 4,3x2,4	.1
80	2177513-2	1	GUIDE PIN CONTROL RACK	.1
90	2179251-0	1	LOCKING DEVICE, AXLE SUPPORT	.1
100	2174546-2	12	VALVE TAPPET ADJ. SCREW ASSY.	.1
110	2174552-0	12	RETAINING SPRING	.1
120	2177139-1	12	CAM FOLLOWER ASSY.	.1
130	2180860-0	1	ECCENTRIC SHAFT ASSY.	.1
140	Z002094-0	6	ROCKER ARM ASSY. (SPARE PART)	.1
150	Z002010-0	6	TAPPET ADJUSTER ASSY.	.1
160	3871310-0	6	HEX.NUT DIN 934-M10x1-10-G	.1
170	2178796-0	14	CIRCLIP 26x1,2	.1
180	2205115-0	1	CONTROL RACK	.1
190	3098031-0	1	SEALING RING DIN 7603-A26x31x1,5-CU	.1
200	3962043-0	1	SCREW PLUG DIN 7604-C-M26x1.5-ST-A3C	.1
210	Z002009-0	6	CONTROL LINK & BOLT	.1
220	3860140-0	1	HEX.SOCK. SCR. ISO 4762-M5x20-LH-10.9-BR	..2
230	3800238-0	1	HEX.HD.SCR. ISO 4017-M6x12-A2-70	.1
240	2176734-2	1	REVOLUTION SENSOR	.1
250	2176729-0	1	O-RING 17,17 x 1,78	..2
260	2177642-0	1	TIMING BELT PULLEY CAMSHAFT	.1
270	Z002011-0	1	NUT & WASHER, CAMSHAFT PULLEY	.1
280	2178548-5	1	IDLER PULLEY ASSY.	.1
290	3860155-0	1	HEX.SOCK. SCR. ISO 4762-M10x70-10.9-DAC	.1
300	2179985-0	1	TIMING BELT	.1
310	2179921-0	1	SEALING, CAMSHAFT HSG-COVER	.1
320	2179920-0	1	CAMSHAFT HOUSING COVER	.1

SE266 S36
MARINE

CAMSHAFT HOUSING

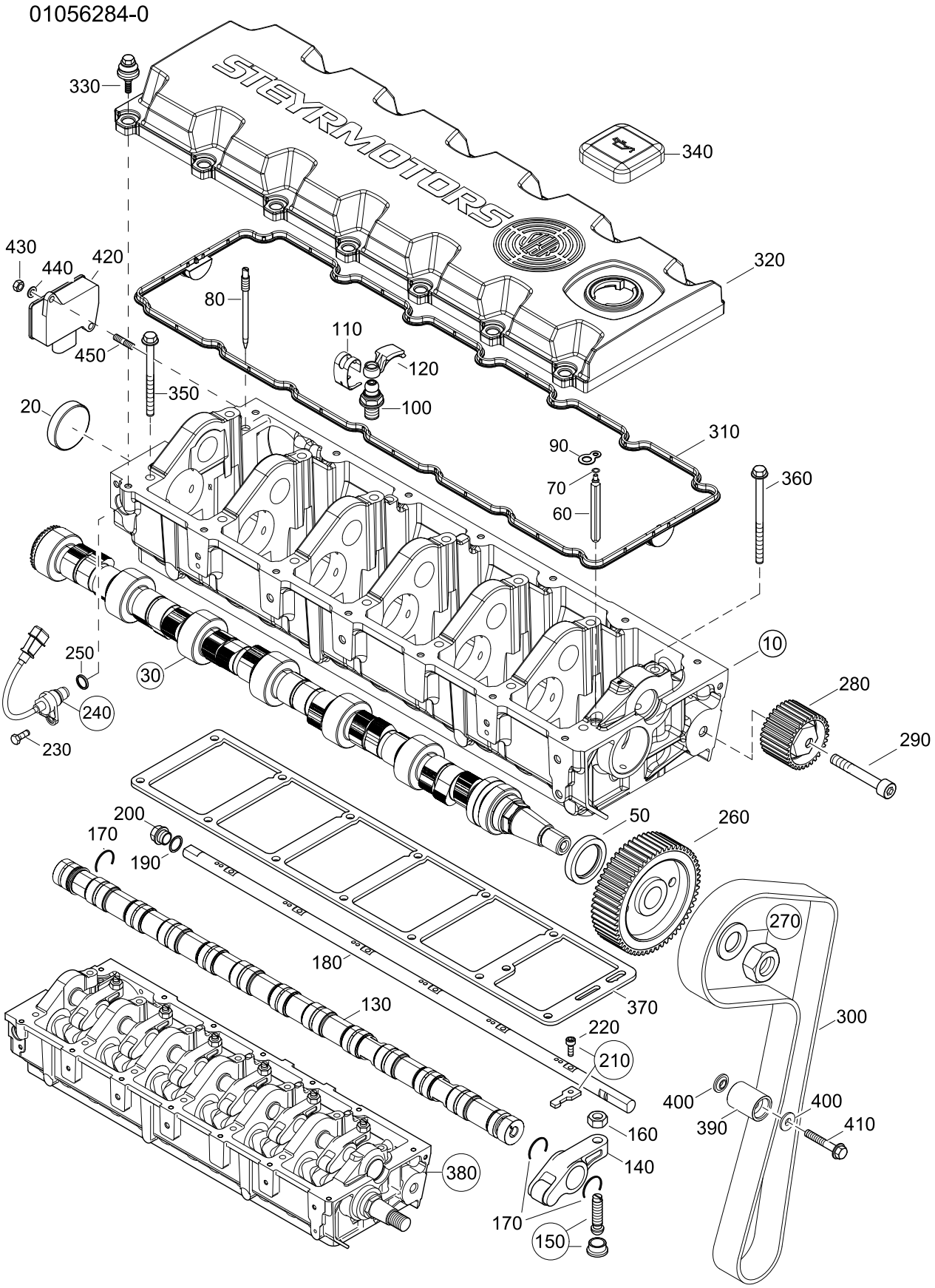

CAMSHAFT HOUSING

SE266 S36 MARINE

01056284-0

Pos.	Part.-No.	Qty	Designation	Step
330	2040575-0	14	SCREW, COVER ACOUSTIC DECOUPLED	.1
340	2179942-0	1	FILLER CAP ENGINE OIL	.1
350	9000248-1	7	HEX.FLANGE BOLT EN 1665-M8x110-10.9-A2C	.1
360	9000785-0	7	HEX.FLANGE BOLT EN 1665-M8x135-12.9-A2C	.1
370	2205427-2	1	GASKET, CYL.BLOCK-CAMSHAFTHSG.	.1
380	Z026101-0	1	VALVE DRIVE ASSY.	.1
390	2180317-1	2	IDLER PULLEY ASSY.	.1
400	2180318-0	4	DISTANCE WASHER	.1
410	9000349-0	2	HEX.FLANGE BOLT EN 1665-M8x40-8.8-A2C	.1
420	2205604-0	1	LINEAR-SENSOR	.1
430	3870051-0	2	HEX.NUT ISO 4032-M4-A2-70	.1
440	3930072-0	2	WASHER LARGE SERIES ISO 7093-4.3-A2	.1
450	9000499-0	2	SET SCREW ISO 4029-M4x16-A2	.1

STEYRMOTORS
INNOVATION WITH LIGHTNESS

SE266 S36 MARINE

OILPUMP, OILPIPE, OILPAN, OIL DIPSTICK

01066284-2

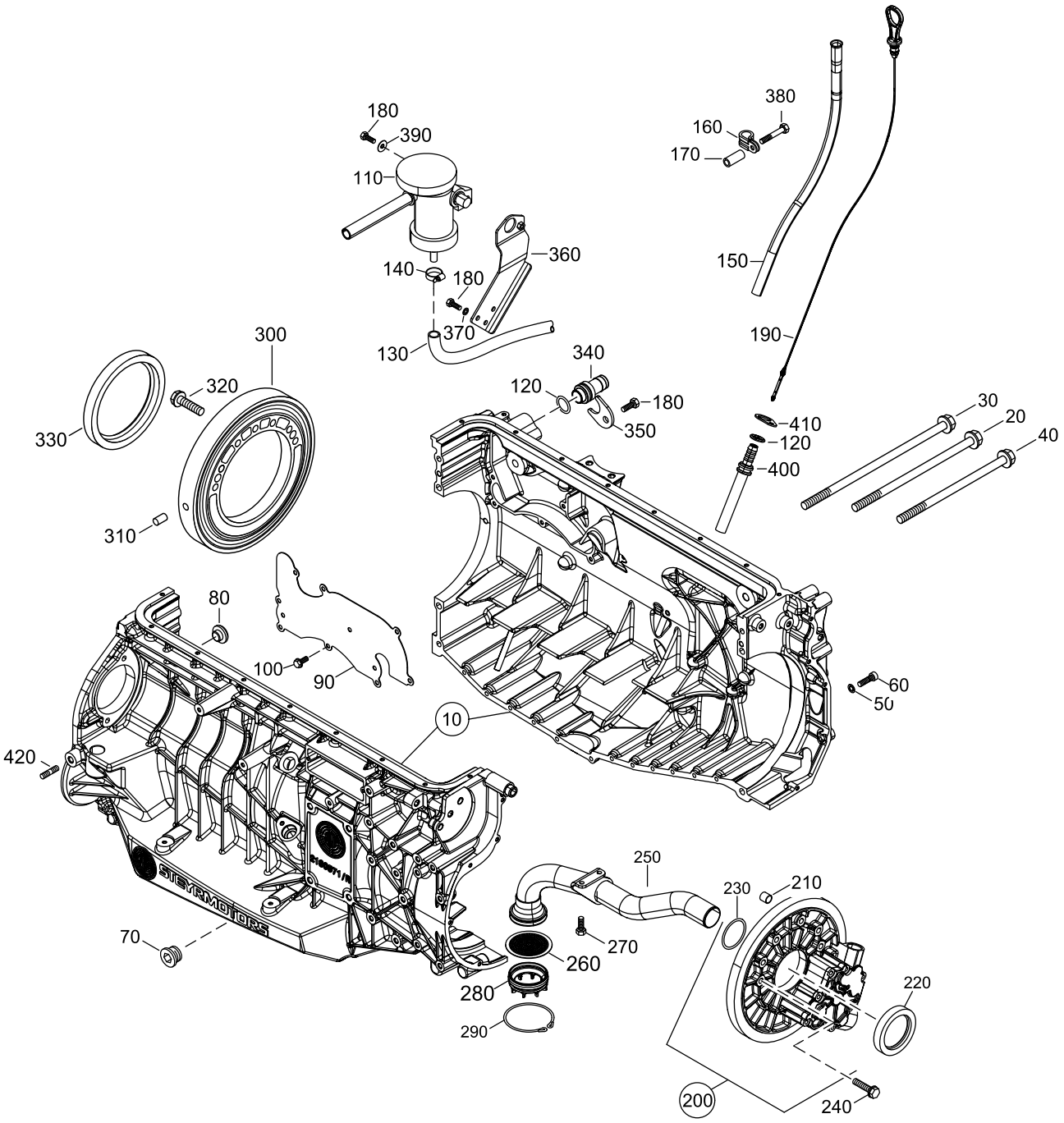

OILPUMP, OILPIPE, OILPAN, OIL DIPSTICK

SE266 S36 MARINE

01066284-2

Pos.	Part.-No.	Qty	Designation	Step
10	Z026103-0	1	ENGINE HOUSING ASSY.	.2
20	9000464-0	2	HEX.FLANGE BOLT EN 1665-M10x200-8.8-A3C	..3
30	9000463-0	2	HEX.FLANGE BOLT EN 1665-M10x250-8.8-A3C	..3
40	9000465-0	3	HEX.FLANGE BOLT EN 1665-M8x180-8.8-A2C	..3
50	3932008-0	12	SPRING WASHER DIN 137-B6-FST-A3C	..3
60	3862327-0	12	HEX.SOCK. HD.CAP SCR. DIN 912-M6x25-8.8-A2C	..3
70	9000590-0	2	HEX.SOCK.SCR.PLUG WITH RUBBER SEAL M22x1,5	..3
80	2174072-0	4	RUBBER PAD	..3
90	2180815-0	1	COVER PRE OIL SEPARATOR	..3
100	9000287-0	9	HEX.FLANGE BOLT EN 1665-M6x12-8.8-A3C	..3
110	Z002051-1	1	OIL SEPARATOR WITH PIPE	.2
120	2178310-1	2	O-RING 17x3,53	.2
130	2178287-2	1	HOSE, OIL DRAIN L=560	.2
140	2174405-0	4	HOSE CLAMP 10-16/7,5 EN 10088-1	.2
150	2180818-0	1	TUBE OIL-DIPSTICK	.2
160	2178566-0	1	PIPE CLAMP RSGU1.15/15-W5	.2
170	2180895-0	1	DISTANCE SLEEVE	.2
180	3800233-0	6	HEX.HD.SCR. ISO 4017-M6x16-A2-70	.2
190	2180819-0	1	OIL DIP STICK ASSY.	.2
200	Z026102-0	1	OIL PUMP ASSY.	.2
210	2170298-0	2	FITTING SLEEVE	..3
220	2170276-1	1	ROTARY SHAFT SEAL	..3
230	2179991-0	1	O-RING 33x3,5	..3
240	9000278-0	6	HEX.FLANGE BOLT EN 1665-M8x35-8.8-A2C	.2
250	2180822-0	1	OILSUCTION PIPE ASSY.	.2
260	2200449-0	1	OIL STRAINER	.2
270	9000287-0	2	HEX.FLANGE BOLT EN 1665-M6x12-8.8-A3C	.2
280	2200450-0	1	SUCTION CAGE	.2
290	9000628-0	1	SNAP RING DIN 7993-A60	.2
300	2174992-1	1	SUPPORT RING REAR	.2
310	3901409-0	1	PARALLEL PIN ISO 2338-8m6x14-ST	.2

SE266 S36 MARINE

OILPUMP, OILPIPE, OILPAN, OIL DIPSTICK

01066284-2

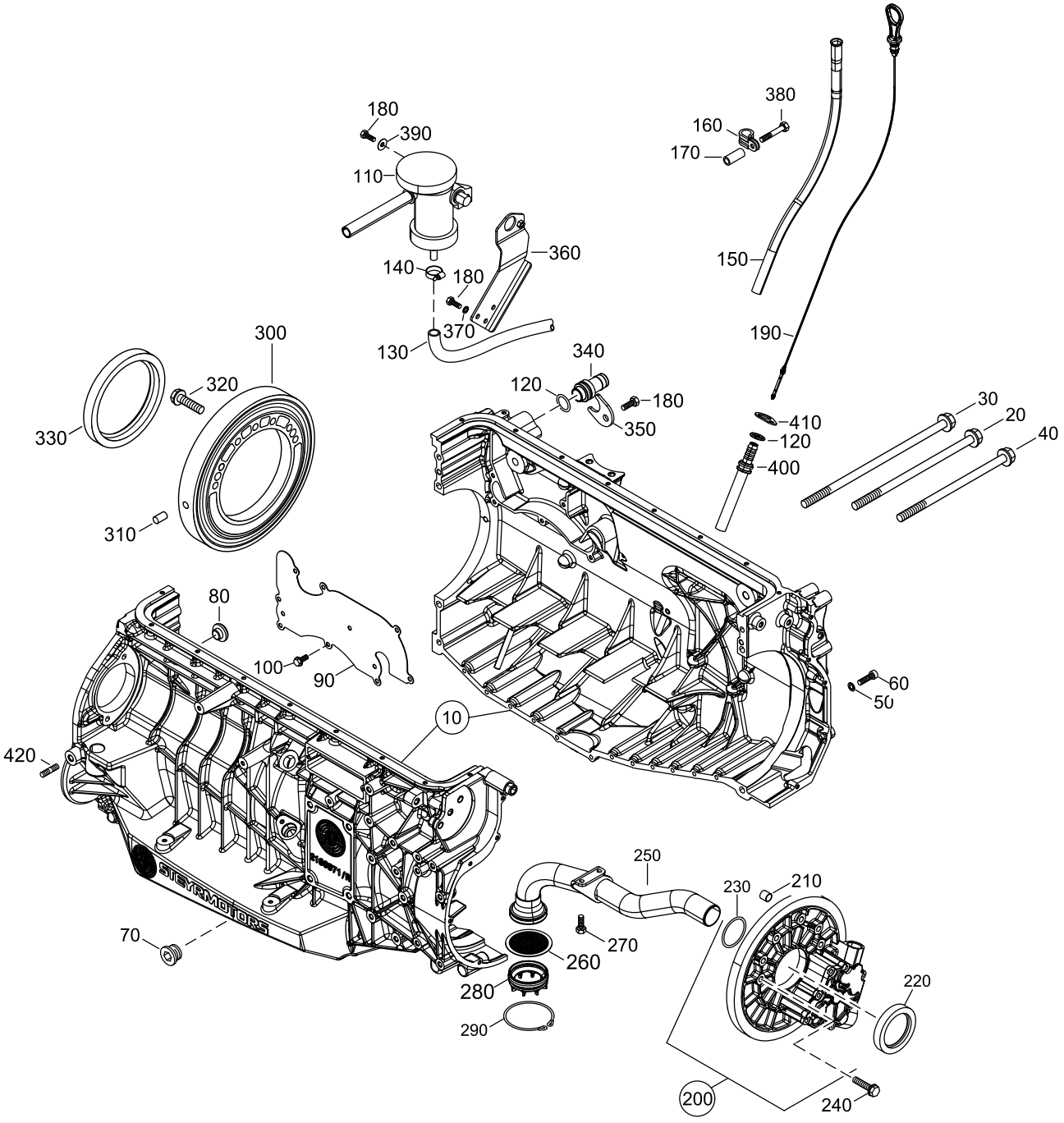

OILPUMP, OILPIPE, OILPAN, OIL DIPSTICK

SE266 S36 MARINE

01066284-2

Pos.	Part.-No.	Qty	Designation	Step
320	9000278-0	7	HEX.FLANGE BOLT EN 1665-M8x35-8.8-A2C	.2
330	2172289-1	1	ROTARY SHAFT SEAL	.2
340	2179544-0	1	FITTING DM16	.2
350	2179543-0	1	CLAMPING PLATE	.2
360	2181045-0	1	BRACKET, OIL SEPARATOR	.2
370	3930070-0	3	WASHER DIN 125-6-140HV-A2	.2
380	9000537-0	1	HEX.FLANGE BOLT EN 1665-M6x30 A2-70	.2
390	9000012-0	1	WASHER LARGE SERIES DIN 9021-6.4-140HV-A2	.2
400	2180817-0	1	NOOZLE OIL DIP STICK	.2
410	2201476-0	1	MOUNTING PLATE	.2
420	9000478-0	1	STUD DIN 835-M10x25-A2-70	.2

SE266 S36 MARINE

INTERCOOLER

01086284-2

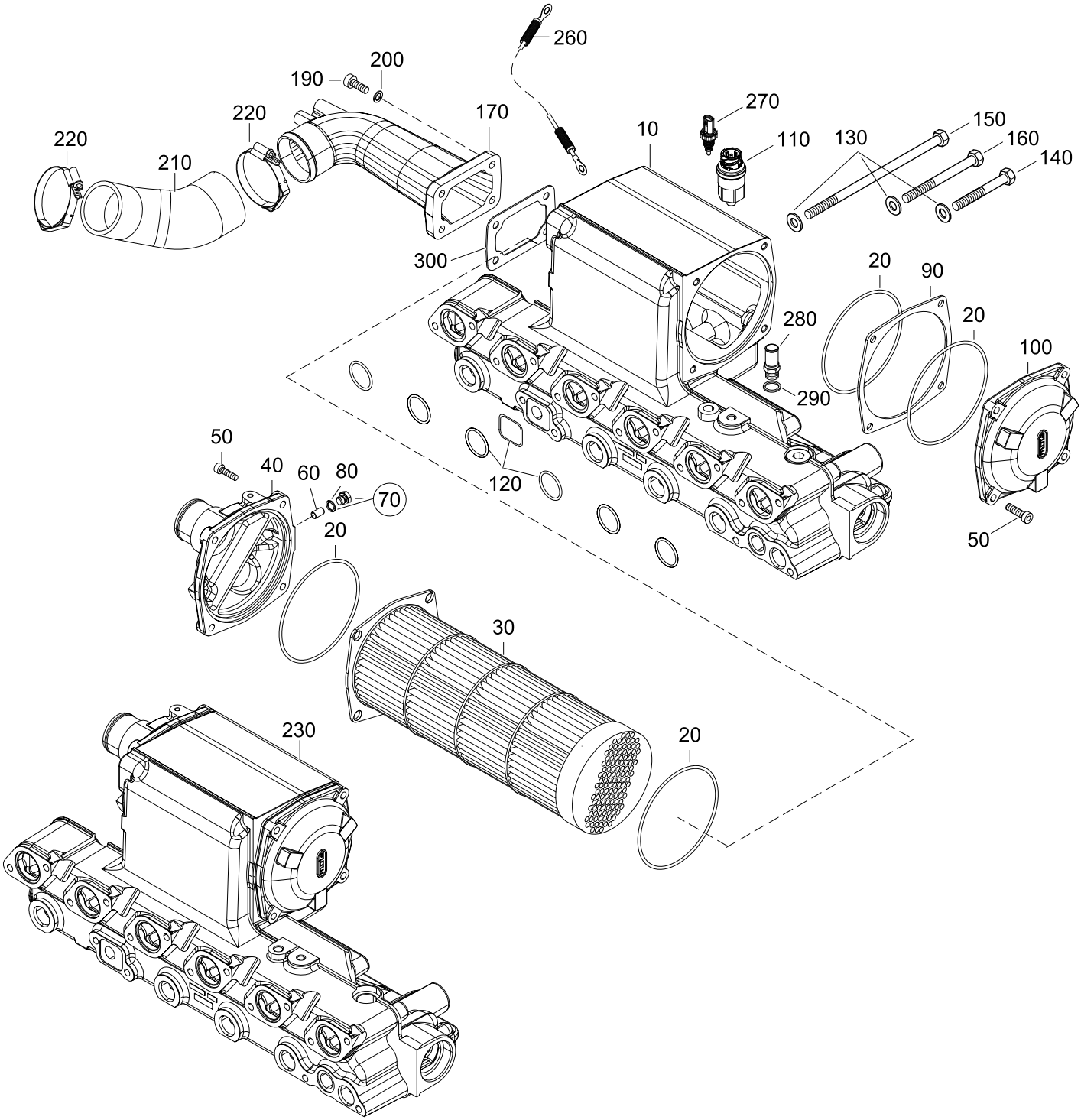

INTERCOOLER

SE266 S36 MARINE

01086284-2

Pos.	Part.-No.	Qty	Designation	Step
10	Z026105-0	1	INTERCOOLER HOUSING, (PAINTED)	.2
20	2180010-0	4	O-RING 135x4	.2
30	2180877-0	1	INTERCOOLER	.2
40	Z026106-0	1	COVER INTERCOOLER REAR, PAINTED	.2
50	9000064-0	8	HEX.SOCK. HD.CAP SCR. DIN 912-M8x35-8.8-A3C	.2
60	2178413-1	1	ZINC ANODE	.2
70	Z002017-0	1	PLUG & SEAL FOR ZINC-ANODE	.2
80	3098020-0	1	SEALING RING DIN 7603-A18x22-CU	..3
90	2180012-0	1	SPACER, INTERCOOLER	.2
100	Z026107-0	1	COVER INTERCOOLER FRONT, PAINTED	.2
110	2180803-0	1	PRESSURE SENSOR 1-8 27 NPT	.2
120	Z026108-0	1	SEAL KIT, INTAKE MANIFOLD	.2
130	3930103-0	12	WASHER DIN 125-8.4-140HV-A2	.2
140	3800471-0	3	HEX.HD.BOLT ISO 4014-M8x90-8.8-A2C	.2
150	9000295-0	7	HEX.HD.BOLT ISO 4014-M8x220-8.8-A2C	.2
160	9000288-0	4	HEX.HD.BOLT ISO 4014-M8x140-8.8-A2C	.2
170	Z026109-0	1	PRESSURE PIPE (PAINTED)	.2
190	3862433-0	4	HEX.SOCK. HD.CAP SCR. DIN 912-M8x30-A2-70	.2
200	3930103-0	4	WASHER DIN 125-8.4-140HV-A2	.2
210	2180975-0	1	CHARGE AIR HOSE	.2
220	2181189-0	2	HOSE CLAMP WITH SPRING 50-70-12	.2
230	Z026104-0	1	INTERCOOLER ASSY. (PAINTED)	.2
260	2178968-0	1	GROUND WIRE	.2
270	2180962-0	1	CHARGE AIR TEMPERATURE SENSOR	.2
280	9000648-4	1	SCREW-IN SOCKET M22x1,5-22	.2
290	9000815-0	1	PROFILED GASKET DIN 3869-22-NBR	.2
300	2201914-0	1	GASKET	.2

SE266 S36 MARINE

POWER TAKE OFF FRONT

01096184-0

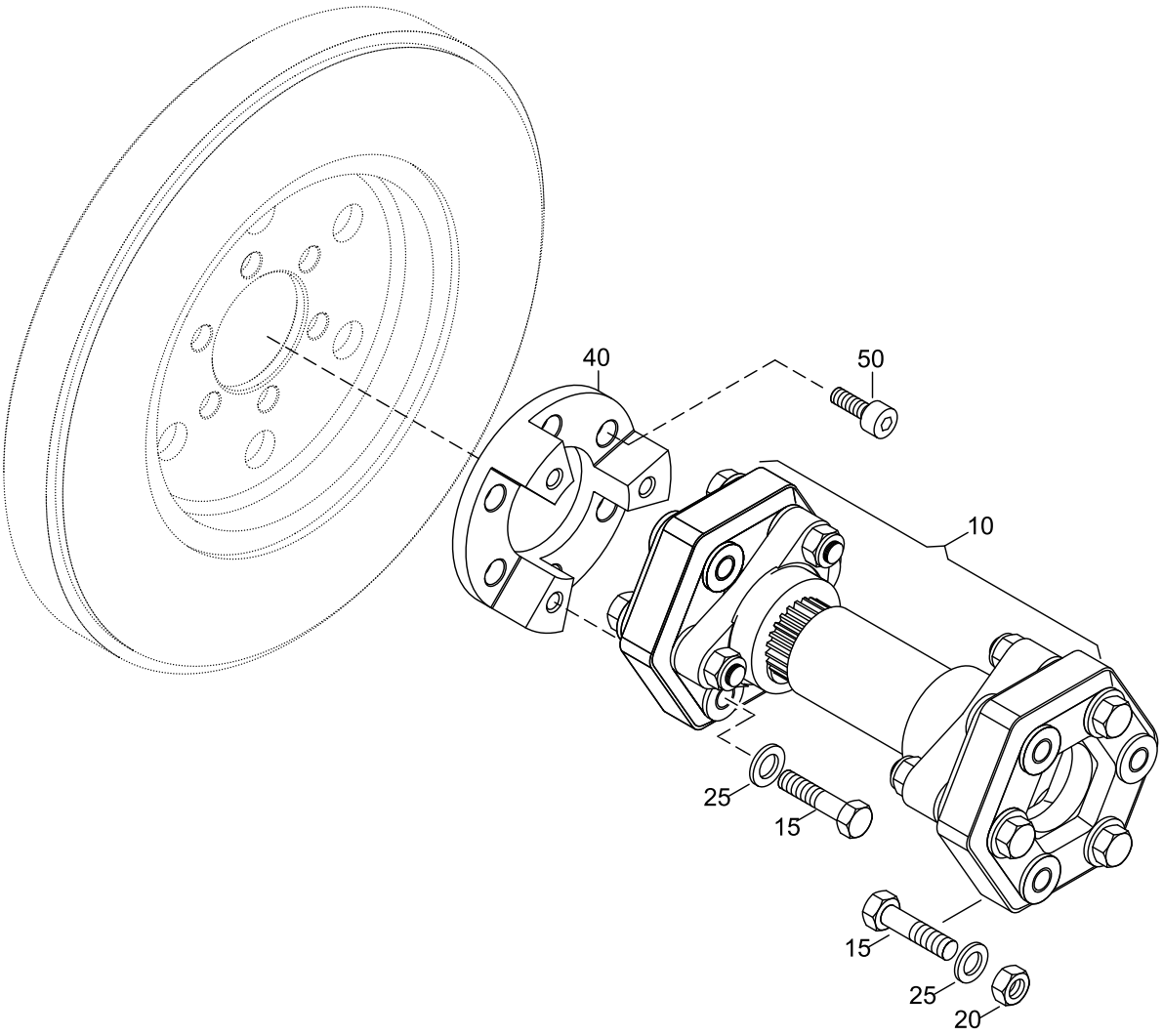

POWER TAKE OFF FRONT

SE266 S36 MARINE

01096184-0

Pos.	Part.-No.	Qty	Designation	Step
10	2205329-0	1	ELASTIC SHAFT L=130-158	.1
15	3802451-0	6	HEX.HD.SCR. ISO 4017-M8x50-8.8-A2C	.1
20	3888722-0	3	HEX.NUT,PREVG.TORQUE ISO 10511-M8-A2C	.1
25	3930103-0	6	WASHER ISO 7089-8-140HV-A2	.1
40	2180391-0	1	ADAPTER RING	.1
50	9001255-0	6	HEX.SOCK. SCR. ISO 4762-M10x35-12.9	.1

SE266 S36 MARINE

OILCOOLER, OILFILTER

01136284-0

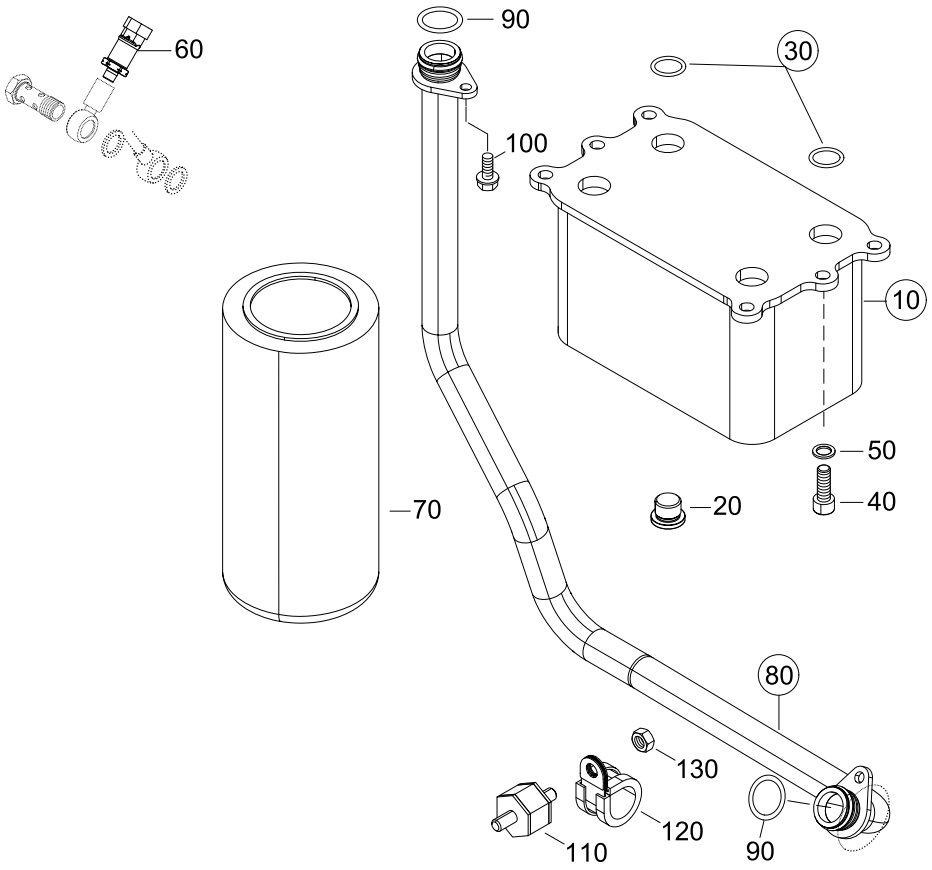

OILCOOLER, OILFILTER

SE266 S36 MARINE

01136284-0

Pos.	Part.-No.	Qty	Designation	Step
10	Z026111-0	1	OILCOOLER (PAINTED)	.1
20	9000588-0	1	SCR.PLUG WITH RUBBER SEAL M16x1,5	..2
30	Z026113-0	1	SEAL KIT, OIL COOLER	.1
40	9000063-0	6	HEX.SOCK. SCR. ISO 4762-M8x20-A2-70	.1
50	3930070-0	6	WASHER ISO 7089-6-140HV-A2	.1
60	2180804-0	1	PRESSURE SENSOR	.1
70	2179817-0	1	OIL FILTER CARTRIDGE	.1
80	Z026112-0	1	OIL PIPE ASSY. (PAINTED)	.1
90	2177249-0	2	O-RING 22x3	..2
100	9000273-0	2	HEX.FLANGE BOLT EN 1665-M6x16-8.8-A2C	.1
110	2177619-1	1	SILENT BLOCK M8	.1
120	2201127-0	1	PIPE CLAMP RSGU1.22-20	.1
130	9000056-1	1	HEX.FLANGE NUT EN 1661-M8-8-A2C	.1

STEYRMOTORS
INNOVATION WITH LIGHTNESS

SE266 S36 MARINE

EXHAUST, HEAT EXCHANGER, GASKETS -->682340974

01146284-0

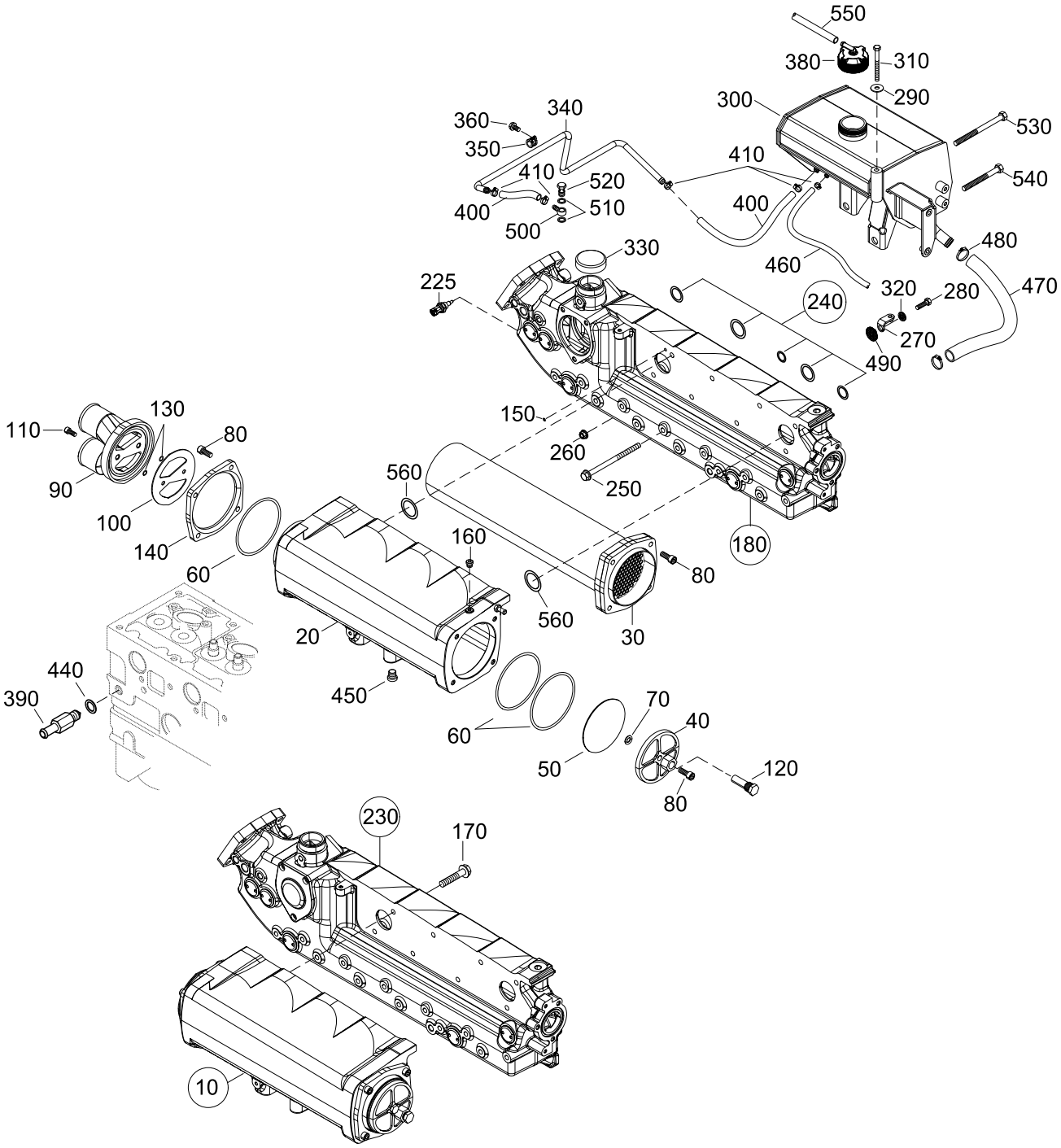

EXHAUST, HEAT EXCHANGER, GASKETS
-->682340974

SE266 S36
MARINE

01146284-0

Pos.	Part.-No.	Qty	Designation	Step
10	Z026115-0	1	HEAT EXCHANGER ASSY. (PAINTED)	.1
20	Z026116-0	1	HEAT EXCHANGER HOUSING (PAINTED)	..2
30	2180883-0	1	HEAT EXCHANGER	..2
40	Z026117-0	1	COVER HEAT EXCHANGER FRONT (PAINTED)	..2
50	2180885-0	1	GASKET, HEAT EXCHANGER COVER	..2
60	9001129-0	3	O-RING	..2
70	9001130-0	1	O-RING	..2
80	9001128-0	9	HEX.SOCK. SCR. ISO 4762-M8x25-A2-70	..2
90	2181092-0	1	COVER, HEAT EXCHANGER	..2
100	2181093-0	1	GASKET, HEAT EXCHANGER COVER	..2
110	9001088-0	2	HEX.SOCK. SCR. ISO 4762-M6x25-A2-70	..2
120	2181091-0	1	ZINC ANODE	..2
130	9001181-0	2	O-RING	..2
140	2181090-0	1	FLANGE PLATE, HEAT EXCHANGER	..2
150	2203689-0	1	SEAL RING 9,0 X 2,0	.1
160	9000585-0	1	HEX.SOCK.SCR.PLUG WITH RUBBER SEAL M10x1	.1
170	9000304-0	8	HEX.FLANGE BOLT EN 1665-M8x60-8.8-A2C	.1
180	Z026114-0	1	EXHAUST MANIFOLD ASSY. (PAINTED)	.1
225	2180773-0	1	TEMPERATURE SENSOR	.1
230	Z026118-0	1	EXHAUST MANIFOLD ASSY. (PAINTED)	.1
240	Z002652-0	1	SEAL KIT, EXH.MANIF.-BLOCK (O-RINGS)	.1
250	9000785-0	12	HEX.FLANGE BOLT EN 1665-M8x135-12.9-A2C	.1
260	3880049-0	3	HEX.FLANGE NUT EN 1661-M6-A2-70	.1
270	2181222-0	1	BRACKET EXPANSION TANK	.1
280	9001088-0	1	HEX.SOCK. SCR. ISO 4762-M6x25-A2-70	.1
290	9000012-0	1	WASHER ISO 7093-6.4-140HV-A2	.1
300	Z026156-0	1	EXPANSION TANK (PAINTED)	.1
310	3800223-0	1	HEX.HD.SCR. ISO 4017-M6x60-A2-70	.1
320	2201540-0	3	WASHER, W. KNITTED WIRE MESH	.1
330	Z021020-0	1	SEALING CAP COOLER	.1
340	2180828-0	1	PIPE WATER EXPANSION TANK	.1

STEYRMOTORS
INNOVATION WITH LIGHTNESS

SE266 S36 MARINE

EXHAUST, HEAT EXCHANGER, GASKETS -->682340974

01146284-0

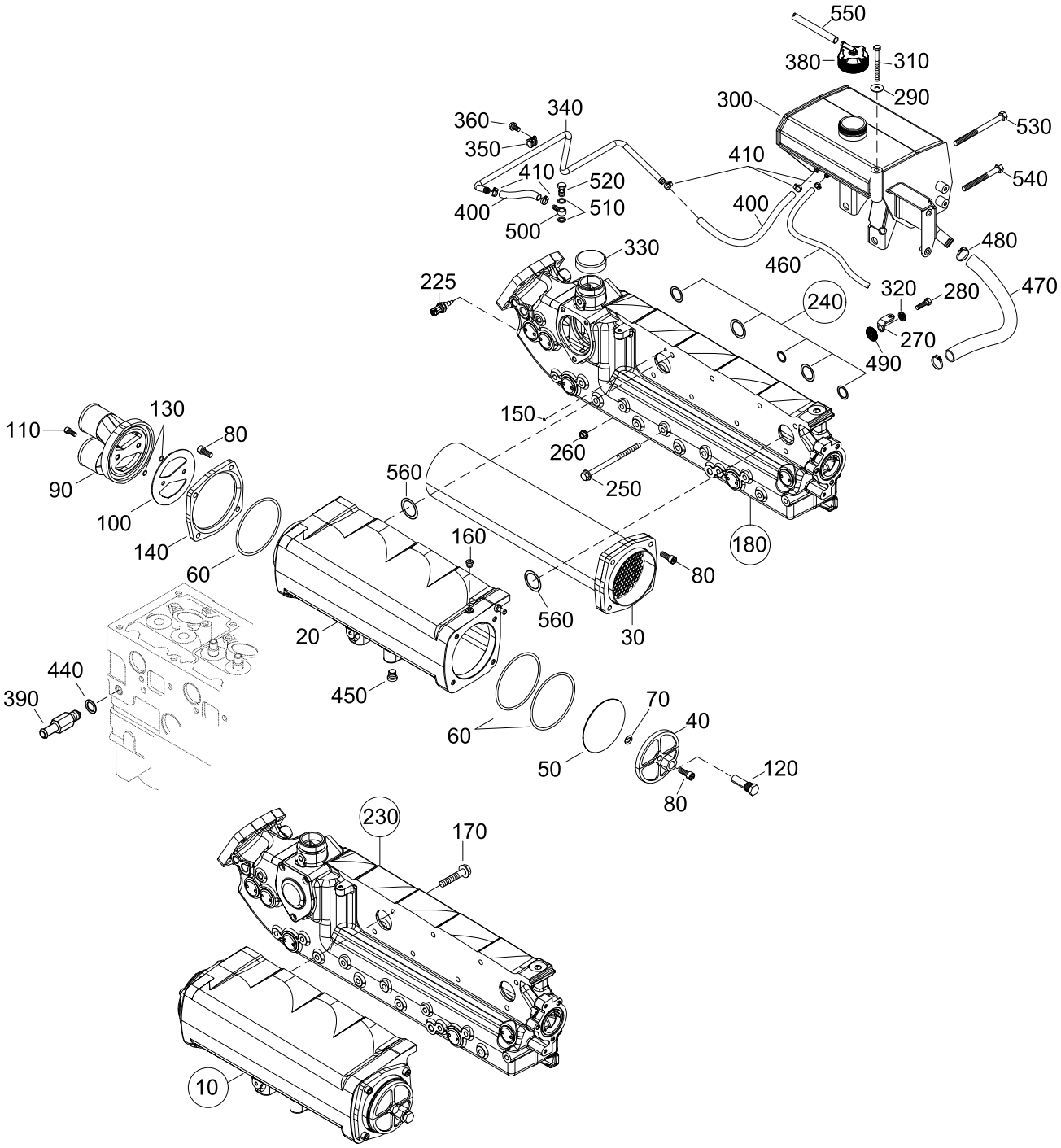

EXHAUST, HEAT EXCHANGER, GASKETS
-->682340974

SE266 S36
MARINE

01146284-0

Pos.	Part.-No.	Qty	Designation	Step
350	2205232-1	2	CLAMP RS1.8/15-W1	.1
360	9001001-0	2	HEX.FLANGE BOLT EN 1665-M6x16-A2-70	.1
380	2181153-0	1	RADIATOR CAP	.1
390	2180843-0	1	DRAIN COCK ASSY.	.1
400	2178621-1	0.7	HOSE	.1
410	9001150-0	4	HOSE CLAMP 9,8-12,3	.1
440	3098015-0	1	SEALING RING DIN 7603-A14x20-CU	.1
450	9000587-0	1	SCR.PLUG WITH RUBBER SEAL M14x1,5	.1
460	2203489-0	0.7	HOSE DN4, DMI=6	.1
470	2178942-0	1	HOSE	.1
480	2177753-0	2	HOSE CLAMP 16-25/9	.1
490	2201541-0	3	SLEEVE, W. KNITTED WIRE MESH	.1
500	2174383-0	1	BANJO	.1
510	3098015-0	2	SEALING RING DIN 7603-A14x20-CU	.1
520	9000053-0	1	HOLLOW SCREW M14x1,5 DIN 7643-10-ZN/NI	.1
530	3800493-0	1	HEX.HD.BOLT ISO 4014-M8x150-8.8-A-A2C	.1
540	9000329-0	1	HEX.HD.BOLT ISO 4014-M8x115-A4-70	.1
550	2200609-0	0.85	VACUUM HOSE ID=6.3mm	.1
560	2179099-0	2	O-RING 46x3	.1

STEYRMOTORS
INNOVATION WITH LIGHTNESS

SE266 S36
MARINE

EXHAUST, HEAT EXCHANGER, GASKETS
682340975-->

01146284-1

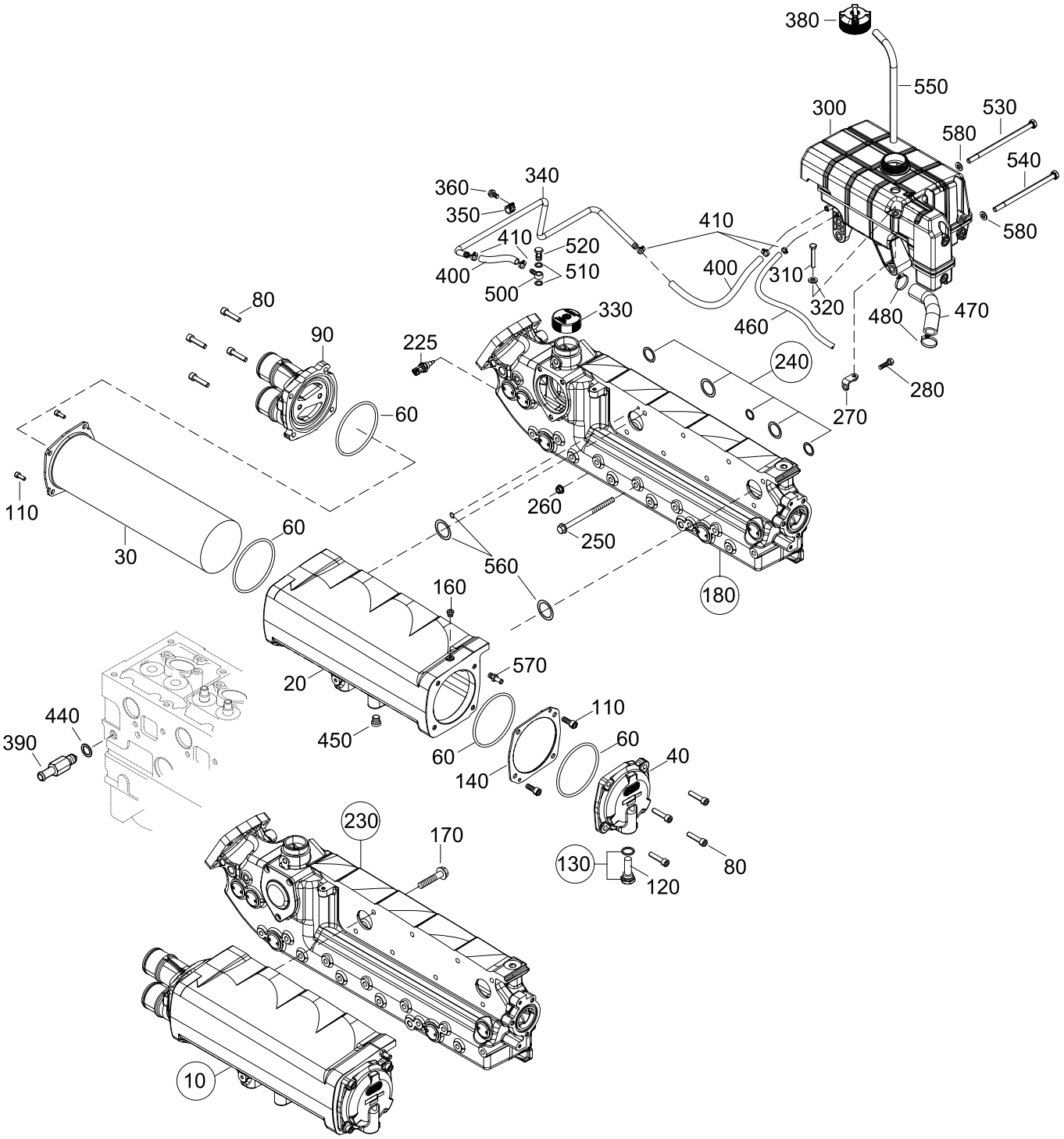

EXHAUST, HEAT EXCHANGER, GASKETS
682340975-->

SE266 S36 MARINE

01146284-1

Pos.	Part.-No.	Qty	Designation	Step
10	Z026115-0	1	HEAT EXCHANGER ASSY. (PAINTED)	.1
20	500091	1	HEAT EXCHANGER HOUSING (PAINTED)	.1
30	700974	1	HEAT EXCHANGER	.1
40	500092	1	COVER HEAT EXCHANGER (PAINTED)	.1
60	900090	4	O-RING 106,2x3,53	.1
80	9000064-0	8	HEX.SOCK. SCR. ISO 4762-M8x35-8.8-A3C	.1
90	500093	1	COVER HEAT EXCHANGER (PAINTED)	.1
110	3862316-0	4	HEX.SOCK. SCR. ISO 4762-M6x16-8.8-A2C	.1
120	2178413-1	1	ZINC ANODE	.1
130	Z002017-0	1	PLUG & SEAL FOR ZINC-ANODE	.1
140	700975	1	SPACER	.1
160	9000585-0	1	HEX.SOCK.SCR.PLUG WITH RUBBER SEAL M10x1	.1
170	9000304-0	8	HEX.FLANGE BOLT EN 1665-M8x60-8.8-A2C	.1
180	Z026114-0	1	EXHAUST MANIFOLD ASSY. (PAINTED)	.1
225	2180773-0	1	TEMPERATURE SENSOR	.1
230	Z026118-0	1	EXHAUST MANIFOLD COMPL. ASSY. (PAINTED)	.1
240	Z002652-0	1	SEAL KIT, EXH.MANIF.-BLOCK (O-RINGS)	.1
250	9000785-0	12	HEX.FLANGE BOLT EN 1665-M8x135-12.9-A2C	.1
260	3880049-0	3	HEX.FLANGE NUT EN 1661-M6-A2-70	.1
270	2180918-0	1	FASTENING TAB, EXPANSION TANK	.1
280	3800238-0	1	HEX.HD.SCR. ISO 4017-M6x12-A2-70	.1
300	2179855-0	1	EXPANSION TANK	.1
310	9000539-0	1	HEX.HD.SCR. ISO 4017-M6x40-A2-70	.1
320	9000012-0	1	WASHER ISO 7093-6.4-140HV-A2	.1
330	Z021020-0	1	SEALING CAP COOLER	.1
340	2180828-0	1	PIPE WATER EXPANSION TANK	.1
350	2205232-1	2	CLAMP RS1.8/15-W1	.1
360	9001001-0	2	HEX.FLANGE BOLT EN 1665-M6x16-A2-70	.1
380	2181153-0	1	RADIATOR CAP	.1
390	2180843-0	1	DRAIN COCK ASSY.	.1
400	2178621-1	0.5	HOSE	.1

STEYRMOTORS
INNOVATION WITH LIGHTNESS

SE266 S36
MARINE

EXHAUST, HEAT EXCHANGER, GASKETS
682340975-->

01146284-1

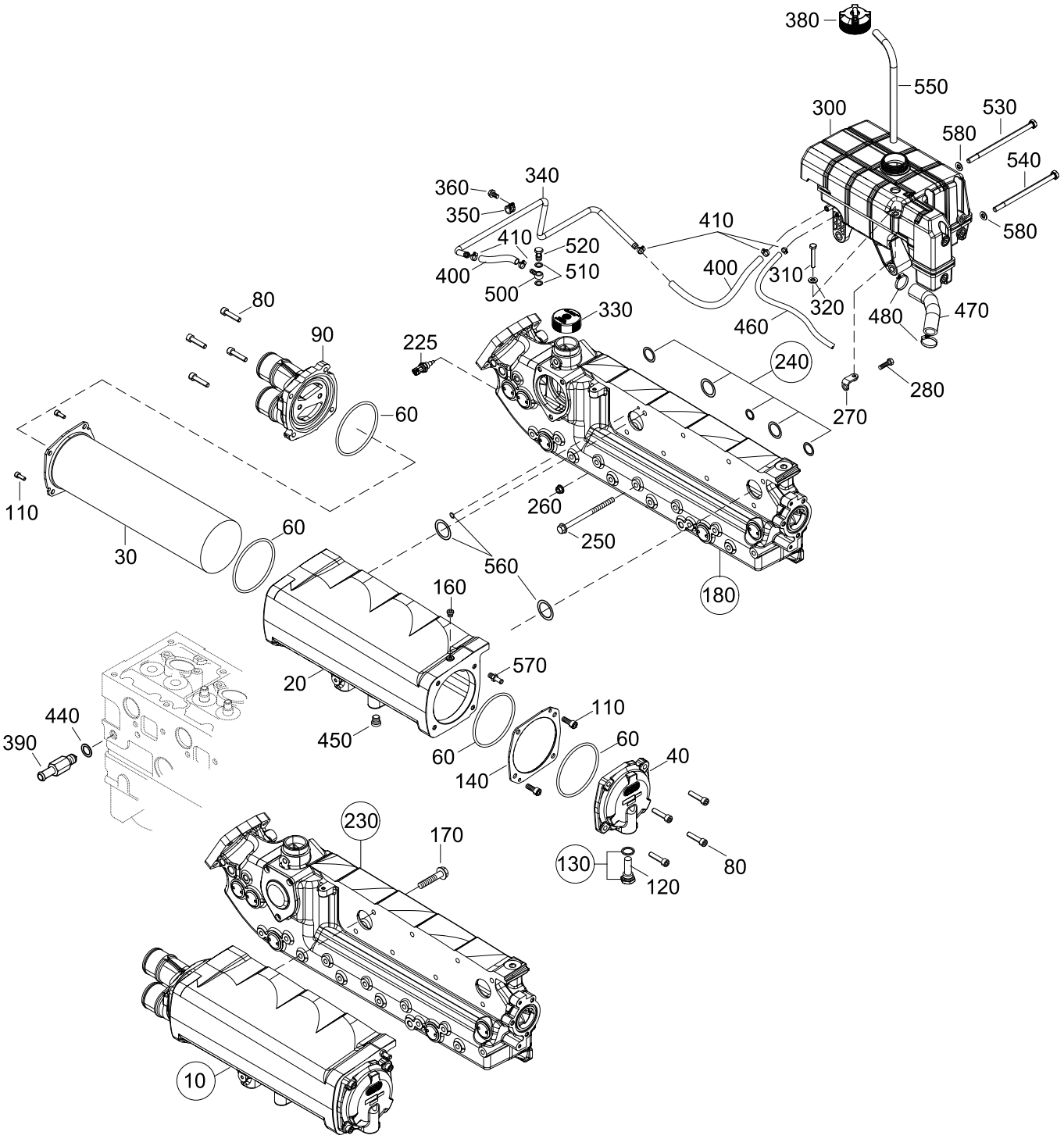

EXHAUST, HEAT EXCHANGER, GASKETS
682340975-->

SE266 S36 MARINE

01146284-1

Pos.	Part.-No.	Qty	Designation	Step
410	9001150-0	4	HOSE CLAMP 9,8-12,3	.1
440	3098015-0	1	SEALING RING DIN 7603-A14x20-CU	.1
450	9000587-0	1	SCR.PLUG WITH RUBBER SEAL M14x1,5	.1
460	2203489-0	0.82	HOSE DN4, DMI=6	.1
470	2181325-0	1	MOULDED HOSE, EXPAN. TANK - INLET PIPE	.1
480	2177753-0	2	HOSE CLAMP 16-25/9	.1
500	2174383-0	1	BANJO	.1
510	3098015-0	2	SEALING RING DIN 7603-A14x20-CU	.1
520	9000053-0	1	HOLLOW SCREW M14x1,5 DIN 7643-10-ZN/NI	.1
530	3800493-0	1	HEX.HD.BOLT ISO 4014-M8x150-8.8-A-A2C	.1
540	9000288-0	1	HEX.HD.BOLT ISO 4014-M8x140-8.8-A-A2C	.1
550	2200609-0	0.85	VACUUM HOSE ID=6.3mm	.1
560	500112	1	SEAL KIT, HEAT EXCHANGER - EXH. MANIFOLD	.1
570	2203376-0	1	HOSE NOZZLES WITH THREAD	.1
580	3930103-0	2	WASHER ISO 7089-8-140HV-A2	.1

SE266 S36 MARINE

TORSIONAL COUPLING

02006284-0

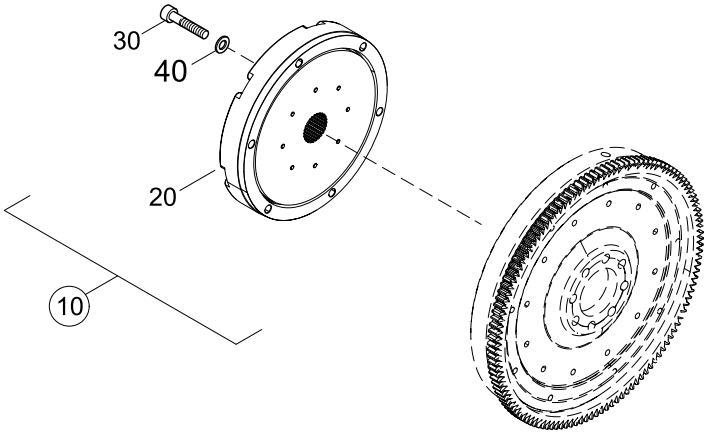

TORSIONAL COUPLING

SE266 S36 MARINE

02006284-0

Pos.	Part.-No.	Qty	Designation	Step
10	Z002066-6	1	COUPLING KIT 20/40-26T F.GEAR & SCREWS	.1
20	2179164-0	1	COUPLER 20-40 26T	..2
30	9000467-0	6	HEX.SOCK. SCR. ISO 4762-M8x45-10.9-DAC	..2
40	3930103-0	6	WASHER ISO 7089-8-140HV-A2	..2

SE266 S36 MARINE

COUPLER

02106284-0

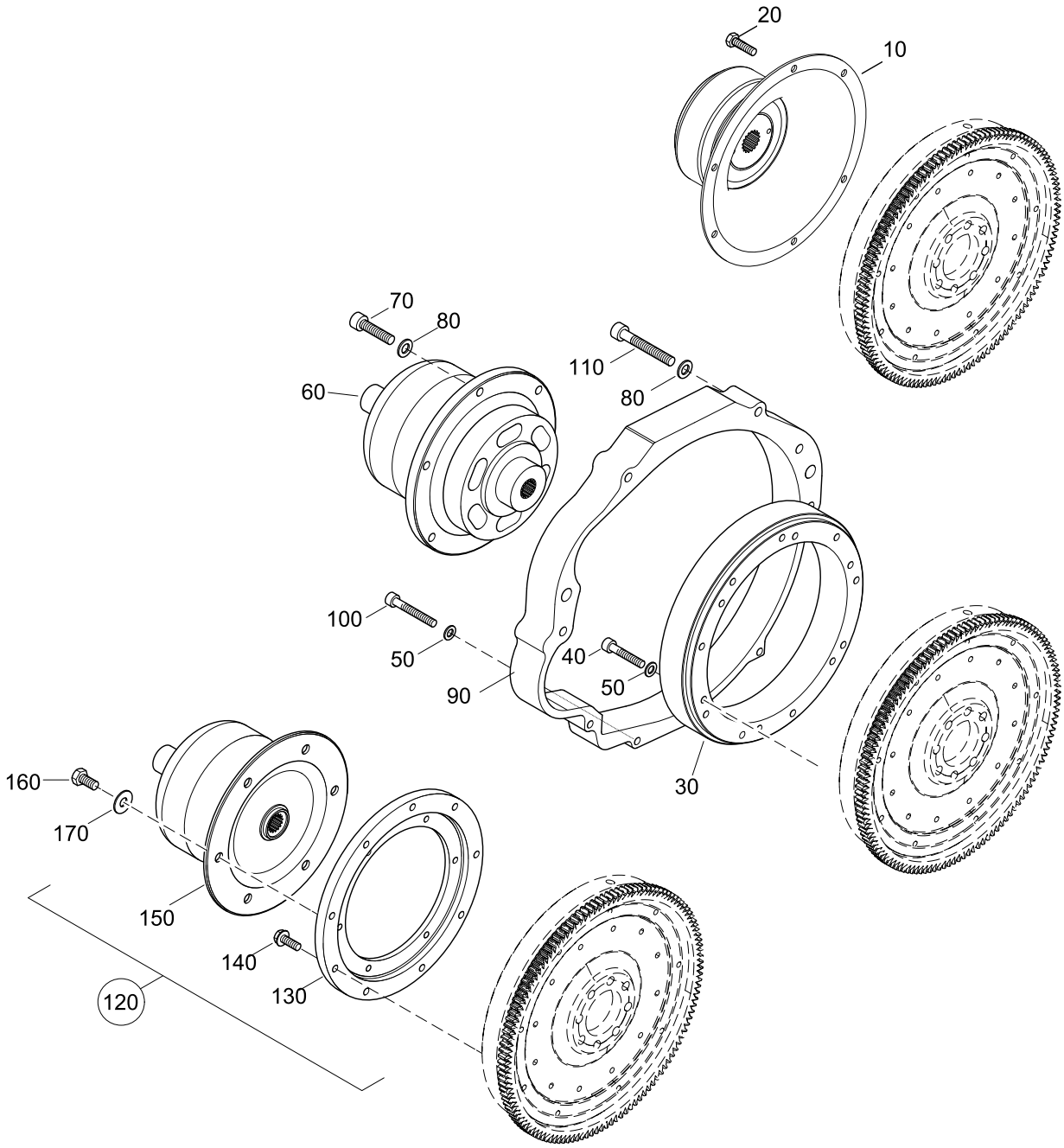

COUPLER

SE266 S36 MARINE

02106284-0

Pos.	Part.-No.	Qty	Designation	Step
10	Z021002-0	1	S.P. COUPLER	.1
20	9000305-0	6	HEX.FLANGE BOLT EN 1665-M8x20-10.9-DAC	.1
30	2179073-0	1	ADAPTER FLY-WHEEL MERCURY DUAL STAGE	.1
40	3862452-0	9	HEX.SOCK. SCR. ISO 4762-M8x50-8.8-A2C	.1
50	3930103-0	13	WASHER ISO 7089-8-140HV-A2	.1
60	2178860-S	1	COUPLER MERCURY-BRAVO DUAL STAGE	.1
70	3860149-0	6	HEX.SOCK. SCR. ISO 4762-M10x40-8.8-A3C	.1
80	3930075-0	11	WASHER ISO 7089-10-140HV-A2	.1
90	2179072-9	1	INTERMEDIATE FLANGE PAINTED	.1
100	3862478-0	4	HEX.SOCK. SCR. ISO 4762-M8x80-8.8-A2C	.1
110	3862680-0	5	HEX.SOCK. SCR. ISO 4762-M10x90-8.8-A3C	.1
120	Z002066-4	1	COUPLING KIT MERCURY-BRAVO (COM.)	.1
130	2179078-0	1	ADAP. FLY-WHEEL MERCURY 6 CYL. (COM.)	..2
140	9000431-0	9	HEX.FLANGE BOLT EN 1665-M8x30-10.9-DAC	..2
150	2178860-M	1	COUPLER MERCURY	..2
160	3802515-0	6	HEX.HD.SCR. ISO 4017-M10x20-8.8-A3C	..2
170	3930075-0	6	WASHER ISO 7089-10-140HV-A2	..2

SE266 S36 MARINE

FUEL PUMP, UNIT INJECTOR, PIPE

03026284-0

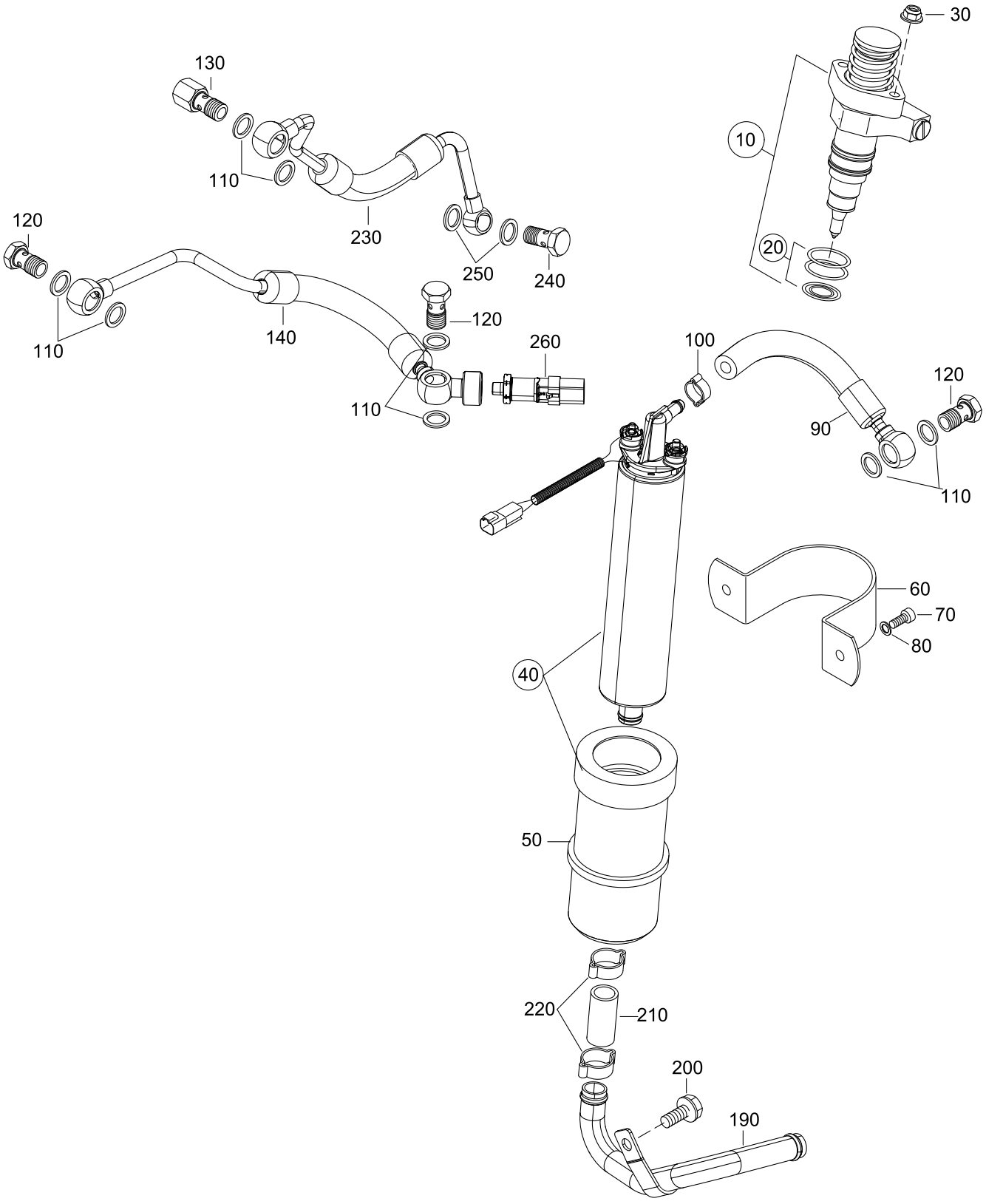

FUEL PUMP, UNIT INJECTOR, PIPE

SE266 S36 MARINE

03026284-0

Pos.	Part.-No.	Qty	Designation	Step
10	Z002030-E	6	UNIT INJECTOR + SEALINGS	.1
20	Z002031-0	1	SEAL KIT, UNIT INJECTOR	.1
30	9000050-0	12	HEX.FLANGE NUT DIN 6331-M8-10	.1
40	2179828-0	1	FUEL PUMP 12V ASSY. (INCL. ISOLATING)	.1
50	2173396-I	1	ISOLATING SLEEVE FUEL PUMP	.1
60	9001071-0	1	CLAMP RS2.53/20-W5	.1
70	9000063-0	2	HEX.SOCK. SCR. ISO 4762-M8x20-A2-70	.1
80	3930103-0	2	WASHER ISO 7089-8-140HV-A2	.1
90	2180865-0	1	FUEL HOSE PUMP-FILTER	.1
100	2178995-0	1	HOSE CLAMP 17,5mm	.1
110	9001171-0	8	BOUNDED SEAL 14,7x21x1,5	.1
120	9000053-0	3	HOLLOW SCREW M14x1,5 DIN 7643-10-ZN/NI	.1
130	800052	1	PRESSURE LIMIT VALVE ASSY.	.1
140	2180891-0	1	FUEL HOSE ASSY.	.1
190	2180851-0	1	FUEL PIPE	.1
200	9000305-0	1	HEX.FLANGE BOLT EN 1665-M8x20-10.9-DAC	.1
210	2181215-0	1	FUEL SUPPLY HOSE PUMP - FILTER	.1
220	2180670-0	2	HOSE CLAMP 27mm	.1
230	2180892-0	1	FUEL HOSE ASSY. BLOCK - COOLER	.1
240	11868	1	HOLLOW SCREW M12x1,5 DIN 7643-8-3-A3C	.1
250	9001170-0	2	BOUNDED SEAL 12,7x19x1,5	.1
260	2180804-0	1	PRESSURE SENSOR	.1

STEYRMOTORS
INNOVATION WITH LIGHTNESS

SE266 S36 MARINE

AIRFILTER, INVERSIONVALVE SOLAS

03046284-0

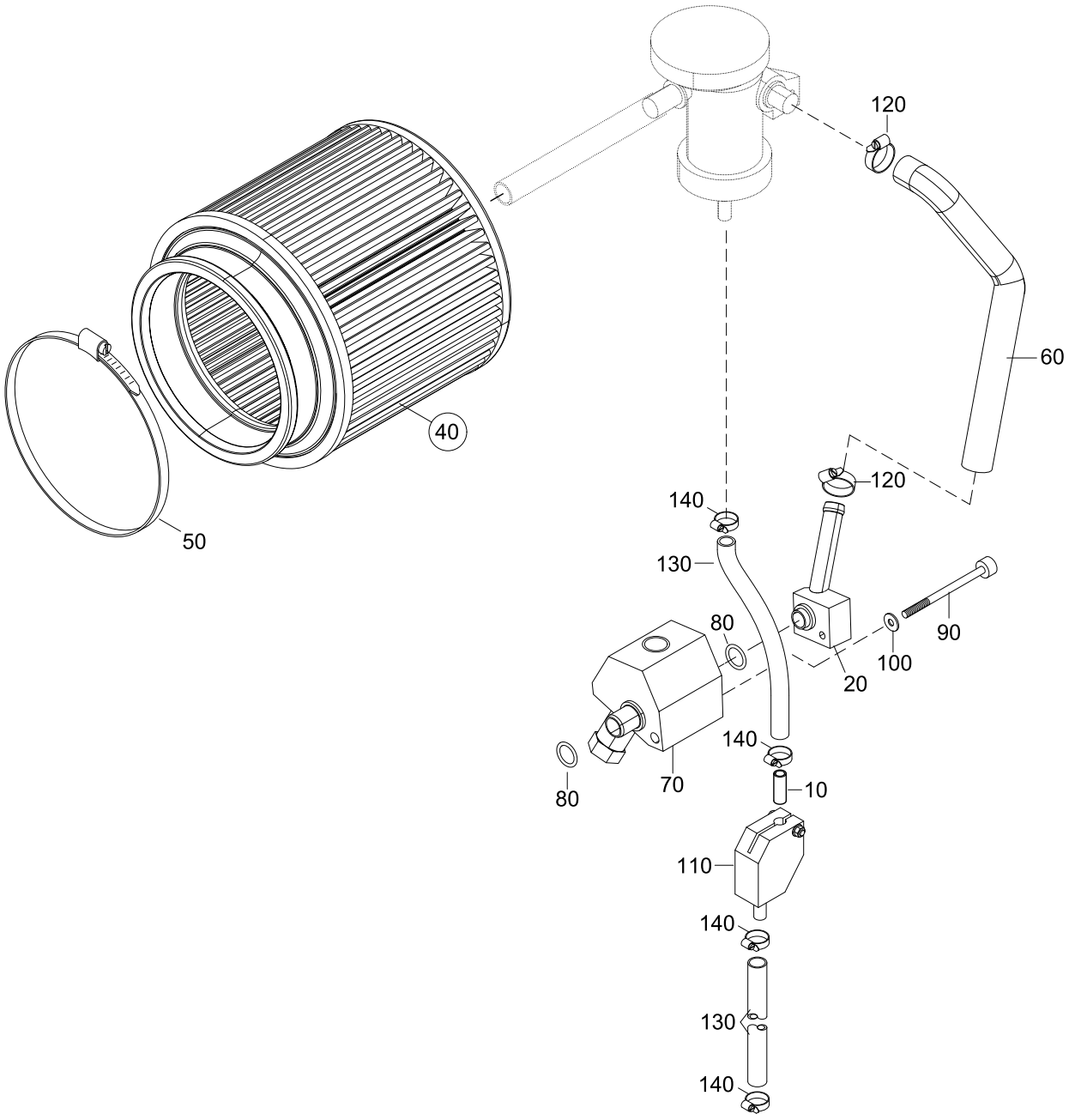

AIRFILTER, INVERSIONVALVE SOLAS

SE266 S36 MARINE

03046284-0

Pos.	Part.-No.	Qty	Designation	Step
10	2179550-0	1	PIPE	.1
20	500061	1	ADAPTER SOLAS (PAINTED)	.1
40	Z002100-4	1	AIR FILTER + HOSE CLAMP	.1
50	2179195-0	1	HOSE CLAMP 110-130/9	..2
60	2180894-0	1	MOULDED HOSE OIL SEPARATOR	.1
70	2179069-9	1	BALL VALVE ASSY. (PAINTED)	.1
80	2178310-1	2	O-RING 17x3,53	.1
90	9000633-0	1	HEX.SOCK. SCR. ISO 4762-M6x80-8.8-A2C	.1
100	3930251-0	1	WASHER ISO 7089-6-140HV-A3C	.1
110	2179070-9	1	BALL VALVE ASSY. (PAINTED)	.1
120	2177753-0	2	HOSE CLAMP 16-25/9	.1
130	2178287-2	1	HOSE, OIL DRAIN L=560	.1
140	2174405-0	2	HOSE CLAMP 10-16/7,5	.1

STEYRMOTORS
INNOVATION WITH LIGHTNESS

SE266 S36 MARINE

TURBO

03056284-3

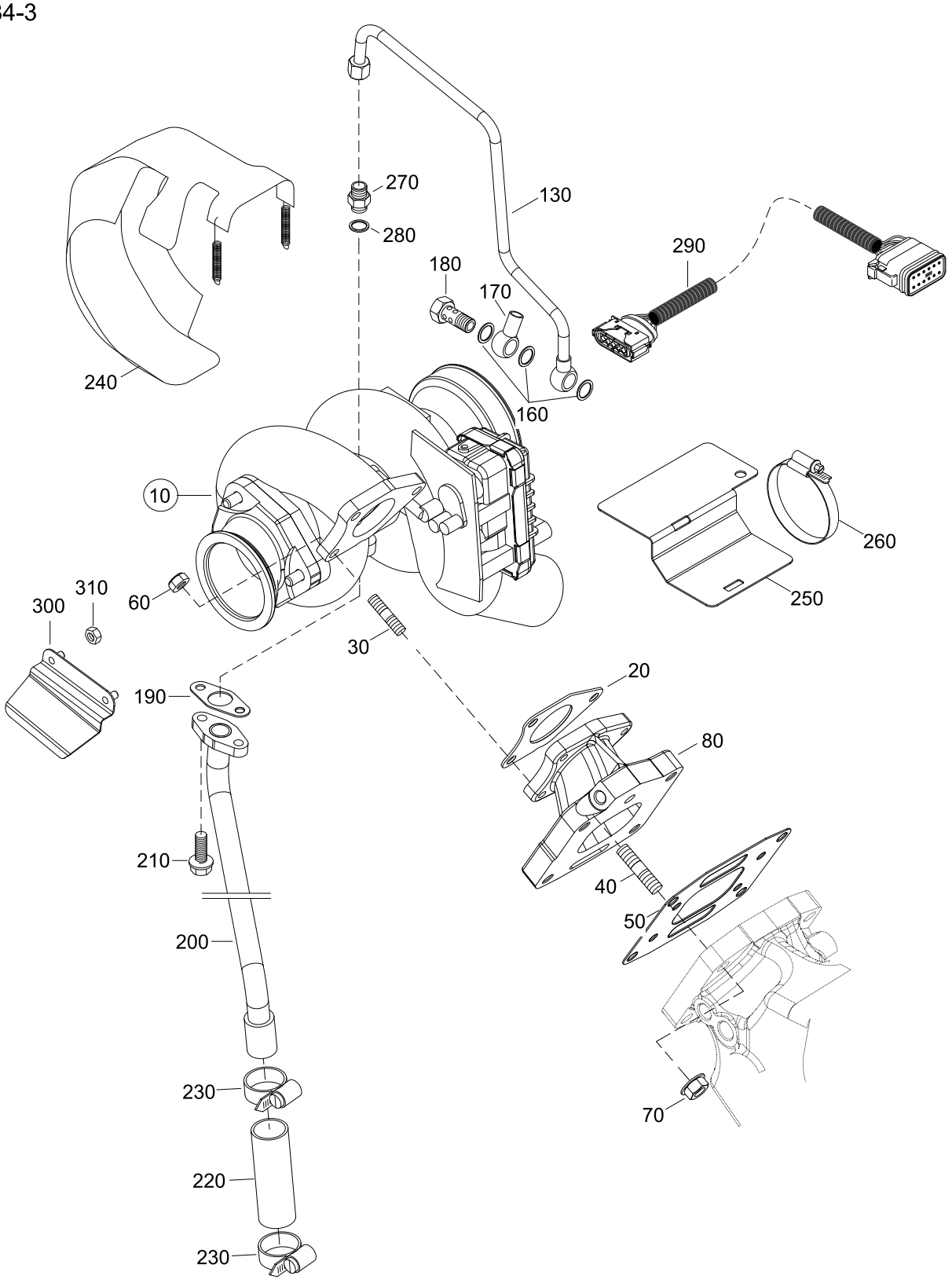

TURBO

SE266 S36 MARINE

03056284-3

Pos.	Part.-No.	Qty	Designation	Step
10	Z026148-0	1	TURBO ASSY. (PAINTED)	.2
20	2181053-0	1	GASKET TURBO CHARGER	.2
30	2203778-2	3	STUD HEAT-RESISTANT STEEL M8x20	.2
40	9000515-0	4	STUD DIN 835-M10x30-8.8-A3C	.2
50	2178487-4	1	GASKET, TURBO CHARGER	.2
60	9001411-0	3	NUT DIN 14440-M8	.2
70	9000042-1	4	HEX.FLANGE NUT DIN 6923-M10-8-A3C	.2
80	2181009-0	1	INTERMEDIATE FLANGE ASSY.	.2
130	2180940-0	1	OIL SUPPLY PIPE TURBO ASSY.	.2
160	3098013-0	3	SEALING RING DIN 7603-A12x18-CU	.2
170	2203772-0	1	BRACKET OIL PRESSURE SENSOR	.2
180	2203591-0	1	DOUBLE HOLLOW SCREW M12x1,5 DIN 7643-8	.2
190	2203278-0	1	GASKET OIL-RETURN TURBOCHARGER	.2
200	2180939-0	1	OIL RETURN PIPE TURBO ASSY.	.2
210	3802321-0	2	HEX.HD.SCR. ISO 4017-M6x16-8.8-A2C	.2
220	2178298-1	1	HOSE, OIL RETURN	.2
230	2177464-0	2	CLAMP 20-32/12	.2
240	2181113-0	1	HEAT PROTECTING TURBO	.2
250	2181223-0	1	HEAT PROTECTING SHEET, TURBO	.2
260	2174407-0	1	HOSE CLAMP 40-60/9	.2
270	2181231-0	1	PIPE UNION ADAPTOR	.2
280	3098010-0	1	SEALING RING DIN 7603-A10x13.5-CU	.2
290	2181124-0	1	HARNESS, VTG	.2
300	2181198-0	1	HEAT PROTECTING SHEET, TURBO	.2
310	3870050-0	2	HEX.NUT DIN 934-M5-A2-70	.2

STEYRMOTORS
INNOVATION WITH LIGHTNESS

SE266 S36
MARINE

CONTR. SOLENOID, INJEC. TIMING DEVICE

03086284-0

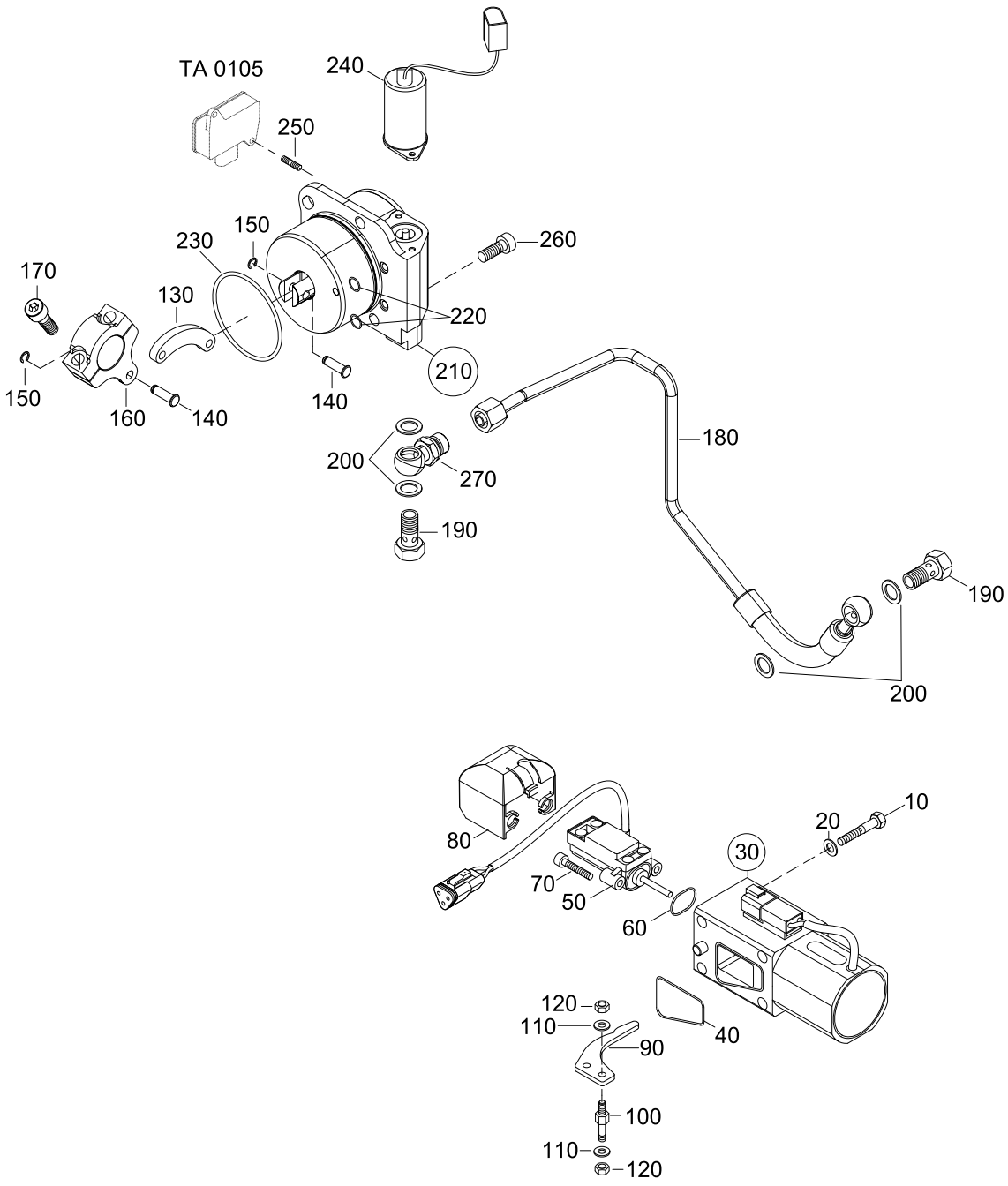

CONTR. SOLENOID, INJEC. TIMING DEVICE

SE266 S36
MARINE

03086284-0

Pos.	Part.-No.	Qty	Designation	Step
10	9000446-1	4	HEX.HD.BOLT ISO 4014-M8x70-A4-70	.1
20	3930103-0	4	WASHER ISO 7089-8-140HV-A2	.1
30	Z002153-0	1	CONTROL SOLENOID	.1
40	2179707-0	1	O-RING 43x3,5	..2
50	Z002160-0	1	SENSOR, CONTROL RACK POSITION	..2
60	2179708-0	1	O-RING 18x1,5	..2
70	9000116-1	2	HEX.SOCK. SCR. ISO 4762-M5x20-A2-70	..2
80	2179766-0	1	PROTECTING CAP, RACK-SENSOR	..2
90	2176745-2	1	CONTROL-LEVER	.1
100	2176746-1	2	DISTANCE-SHAFT	.1
110	3931062-0	4	SPRING LOCK WASHER DIN 127-B5-FST-A3C	.1
120	3871222-0	4	HEX.NUT ISO 4032-M5-8-A2C	.1
130	2205591-0	1	CONNECTING ROD	.1
140	2205593-0	2	PARALLEL PIN	.1
150	9000483-0	2	RETAINING WASHER F.SHAFT DIN 6799-5	.1
160	2020574-0	1	TORSION ARM ASSY.	.1
170	9000737-0	2	HEX.SOCK. SCR. ISO 4762-M8x25-10.9	.1
180	2180821-0	1	OIL SUPPLY PIPE ASSY. ITD	.1
190	11868	2	HOLLOW SCREW M12x1,5 DIN 7643-8-3-A3C	.1
200	9001170-0	4	BOUNDED SEAL 12,7x19x1,5	.1
210	Z026135-0	1	INJEC. TIMIMG DEVICE ASSY. (SPARE PART)	.1
220	2179365-0	2	O-RING 5x1,5	..2
230	2179369-0	1	O-RING 66,4x1,78	..2
240	2181491-0	1	MAGNETIC VALVE - ITD	..2
250	9000499-0	2	SET SCREW ISO 4029-M4x16-A2	..2
260	9000063-0	3	HEX.SOCK. SCR. ISO 4762-M8x20-A2-70	.1
270	2180866-0	1	BANJO	.1

SE266 S36 MARINE

FUEL FILTER

03096284-0

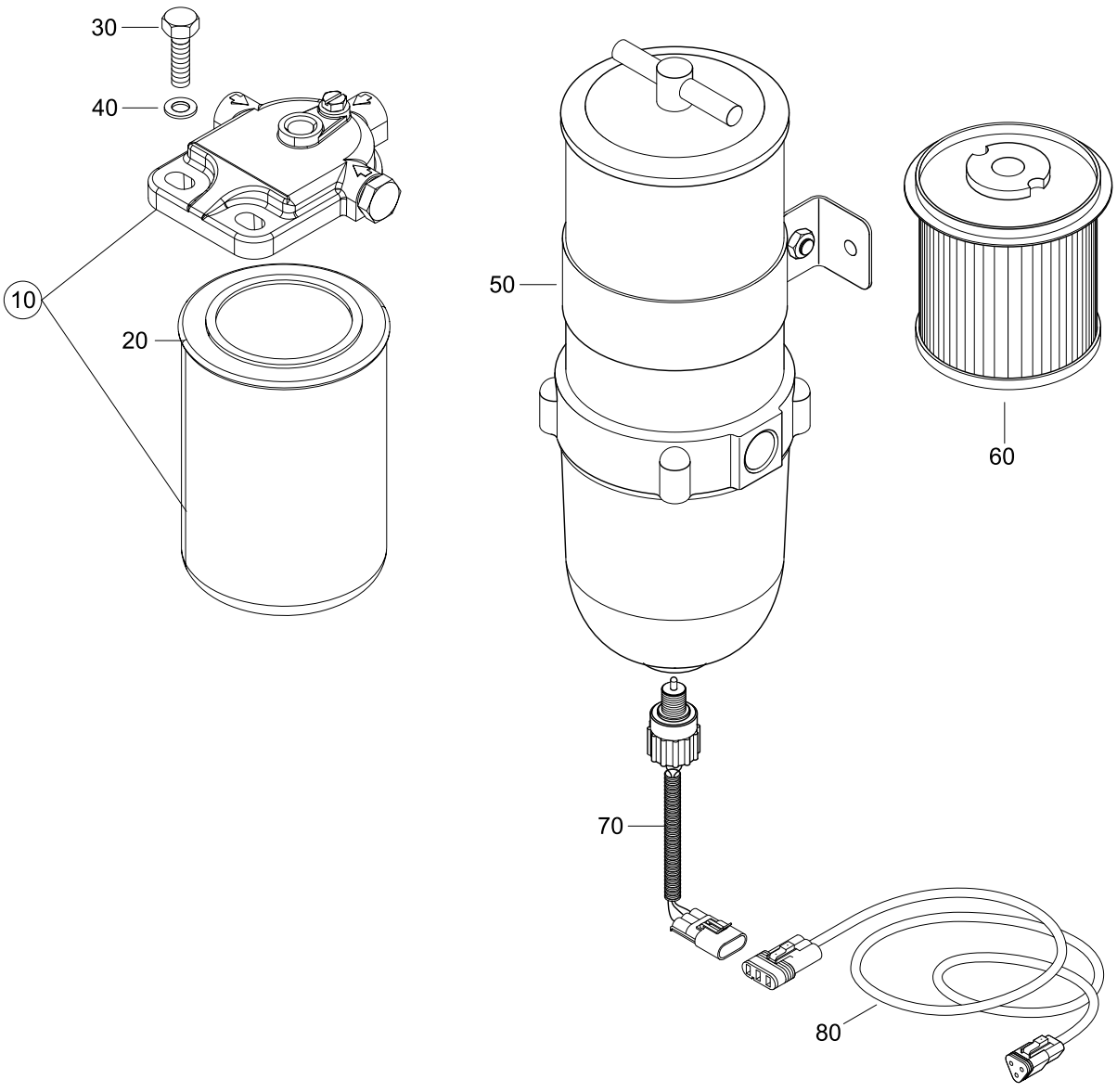

FUEL FILTER

SE266 S36 MARINE

03096284-0

Pos.	Part.-No.	Qty	Designation	Step
10	Z026121-0	1	FILTER BRACKET W. FUEL FILTER ASSY.	.1
20	2180831-0	1	FUEL FILTER CARTRIDGE	..2
30	3802523-0	2	HEX.HD.SCR. ISO 4017-M10x25-8.8-A3C	.1
40	3930075-0	2	WASHER ISO 7089-10-140HV-A2	.1
50	2181035-0	1	PRE FUEL FILTER	.1
60	2181036-0	1	PRE FUEL FILTER CARTRIDGE	..2
70	701667	1	SENSOR, WATER IN FUEL	..2
80	2181200-0	1	HARNESS WATER SEPERATOR	.1

STEYRMOTORS
INNOVATION WITH LIGHTNESS

SE266 S36 MARINE

GLOW PIN

03116084-0

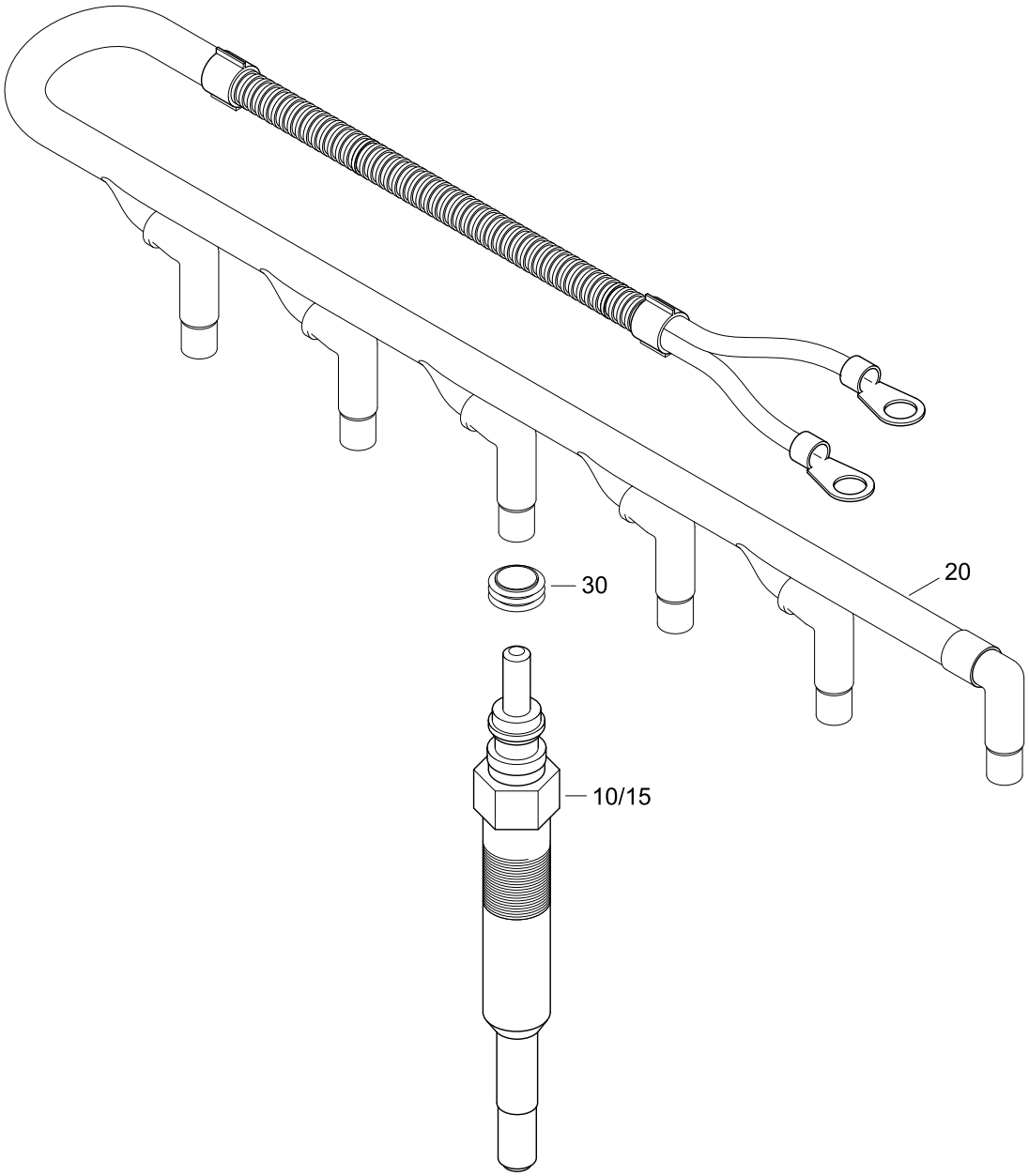

GLOW PIN

SE266 S36 MARINE

03116084-0

Pos.	Part.-No.	Qty	Designation	Step
10	2177492-5	6	GLOW PLUG (STANDARD)	.1
15	2177492-6	1	GLOW PLUG 23V (OPTION)	.1
20	2200215-8	1	CABLE GLOW-PLUG ASSY. 6 CYL.	.1
30	2179256-0	6	GASKET GLOW PLUG CONNECTOR	..2

STEYRMOTORS
INNOVATION WITH LIGHTNESS

SE266 S36 MARINE

POTENTIOMETER ACCELERATOR

03126284-0

TILL --> 682340440

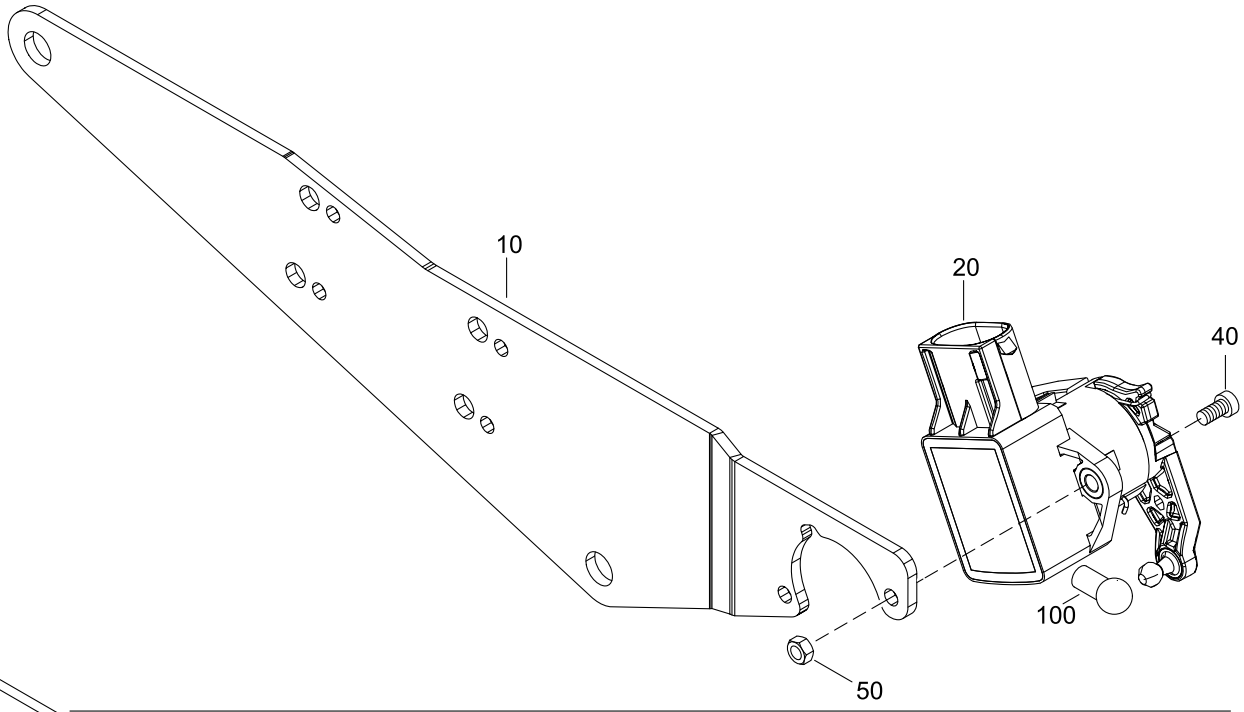

FROM 682340441 -->

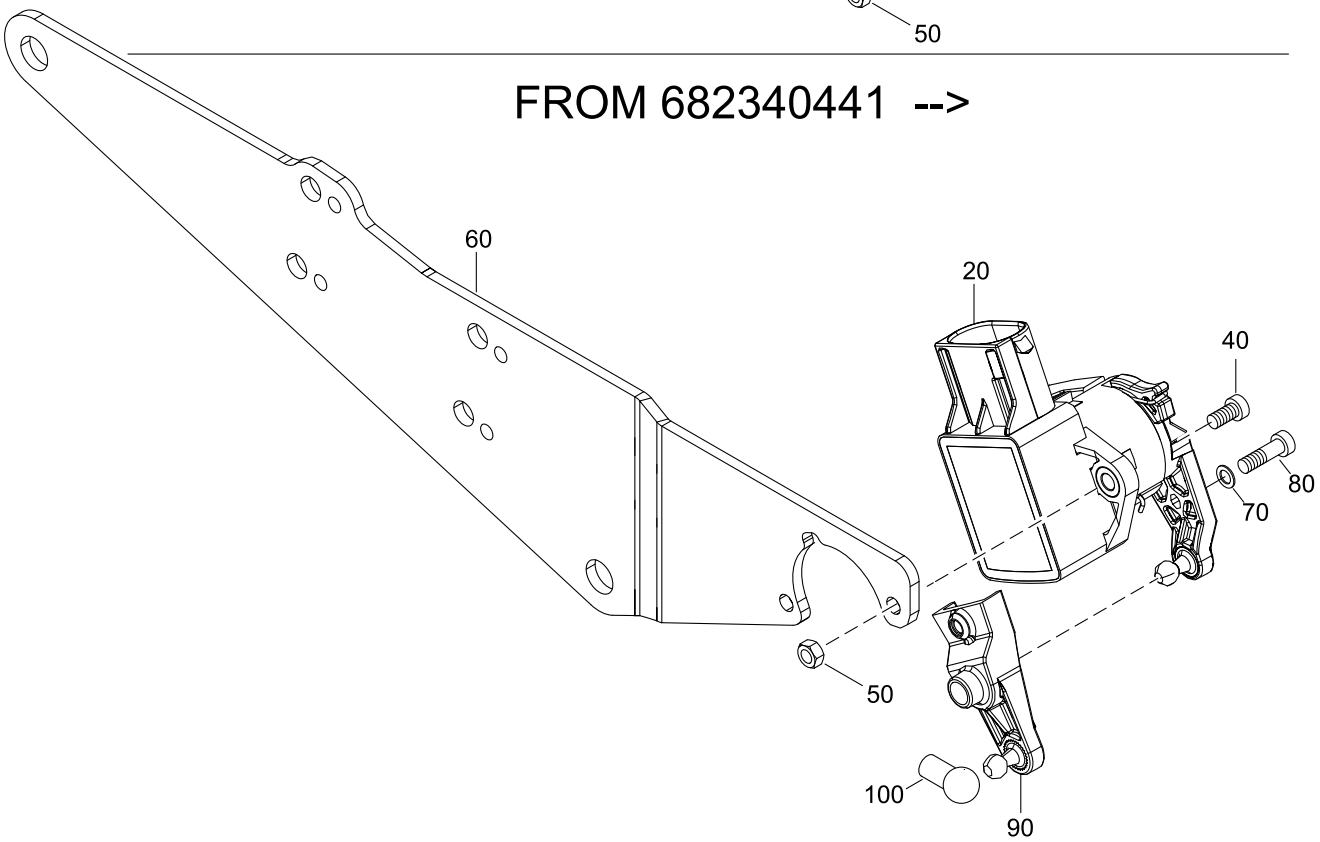

POTENTIOMETER ACCELERATOR

SE266 S36 MARINE

03126284-0

Pos.	Part.-No.	Qty	Designation	Step
10	2180846-0	1	BRACKET POTENTIOMETER	.1
20	2180847-0	1	POTENTIOMETER ACCELERATOR	.1
40	2309129-0	2	HEX.SOCK. SCR. ISO 4762-M4x12-A2-70	.1
50	3870051-0	2	HEX.NUT ISO 4032-M4-A2-70	.1
60	700872	1	LEVER	.1
70	900100	1	WASHER ISO 7089-3-200HV-A2	.1
80	900101	1	HEX.HD.SCR. ISO 4017-M3x10-A2-70	.1
90	700979	1	BRACKET POTENTIOMETER	.1
100	2180920-0	1	BALL SOCKET INCL. RETAINING CLIP	.1

SE266 S36 MARINE

HIGH RISER, EXHAUSTPIPE

04016284-0

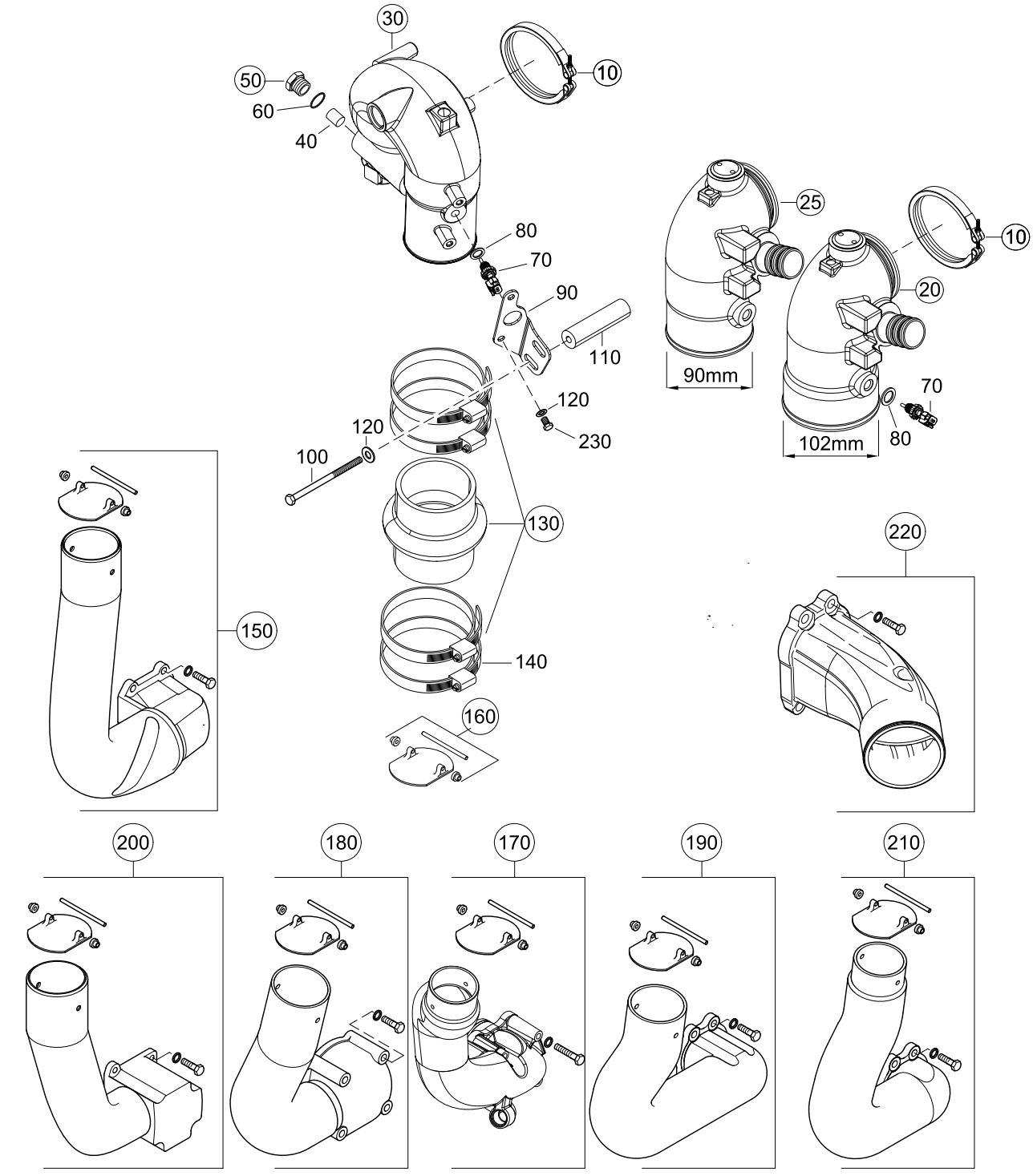

HIGH RISER, EXHAUSTPIPE

SE266 S36 MARINE

04016284-0

Pos.	Part.-No.	Qty	Designation	Step
10	2179198-0	1	V-CLAMP	.1
20	Z026133-0	1	ELBOW ASSY. EXHAUST (PAINTED)	.1
25	2179008-8	1	ELBOW ASSY, EXHAUST 256 (PAINTED)	.1
30	Z002626-5	1	ELBOW EXHAUST ASSY. PAINTED	.1
40	2178413-1	1	ZINC ANODE	..2
50	Z002017-0	1	PLUG & SEAL FOR ZINC-ANODE	..2
60	3098020-0	1	SEALING RING DIN 7603-A18x22-CU	..2
70	2180773-0	1	TEMPERATURE SENSOR	.1
80	3098013-0	1	SEALING RING DIN 7603-A12x18-CU	.1
90	2181087-0	1	BRACKET SUPPORT, ELBOW (PAINTED)	.1
100	9000288-2	1	HEX.HD.BOLT ISO 4014-M8x120-A2-70	.1
110	2181129-0	1	DISTANCE PIPE	.1
120	3930103-0	3	WASHER ISO 7089-8-140HV-A2	.1
130	Z002072-0	1	KIT, HOSE-EXHAUST PIPE	.1
140	2178943-0	4	HOSE CLAMP 90-110-12	..2
150	2178896-0	1	EXHAUST PIPE ASSY. VOLVO SX/OMC COBRA	.1
160	Z002063-0	1	FLAP KIT, EXHAUST PIPE	..2
170	2178885-0	1	EXHAUST PIPE ASSY. VOLVO DP290 R4, R6	.1
180	2178885-1	1	EXHAUST PIPE AY. (PAIN.) VOLVO DP290 V8	.1
190	2178886-1	1	EXHAUST PIPE AY. (PAIN.) MERCURY	.1
200	2178925-0	1	EXHAUST PIPE AY. (PAIN.) STERNPOWER	.1
210	2178886-2	1	EXHAUST PIPE ASSY. DUAL STAGE COUPLER	.1
220	Z002121-0	1	EXHAUST FLANGE MERCURY-TRANSOM (PAINTED)	.1
230	3800224-0	2	HEX.HD.SCR. ISO 4017-M8x20-A2-70	.1

SE266 S36 MARINE

WATERPIPE, THERMOSTAT

05036284-0

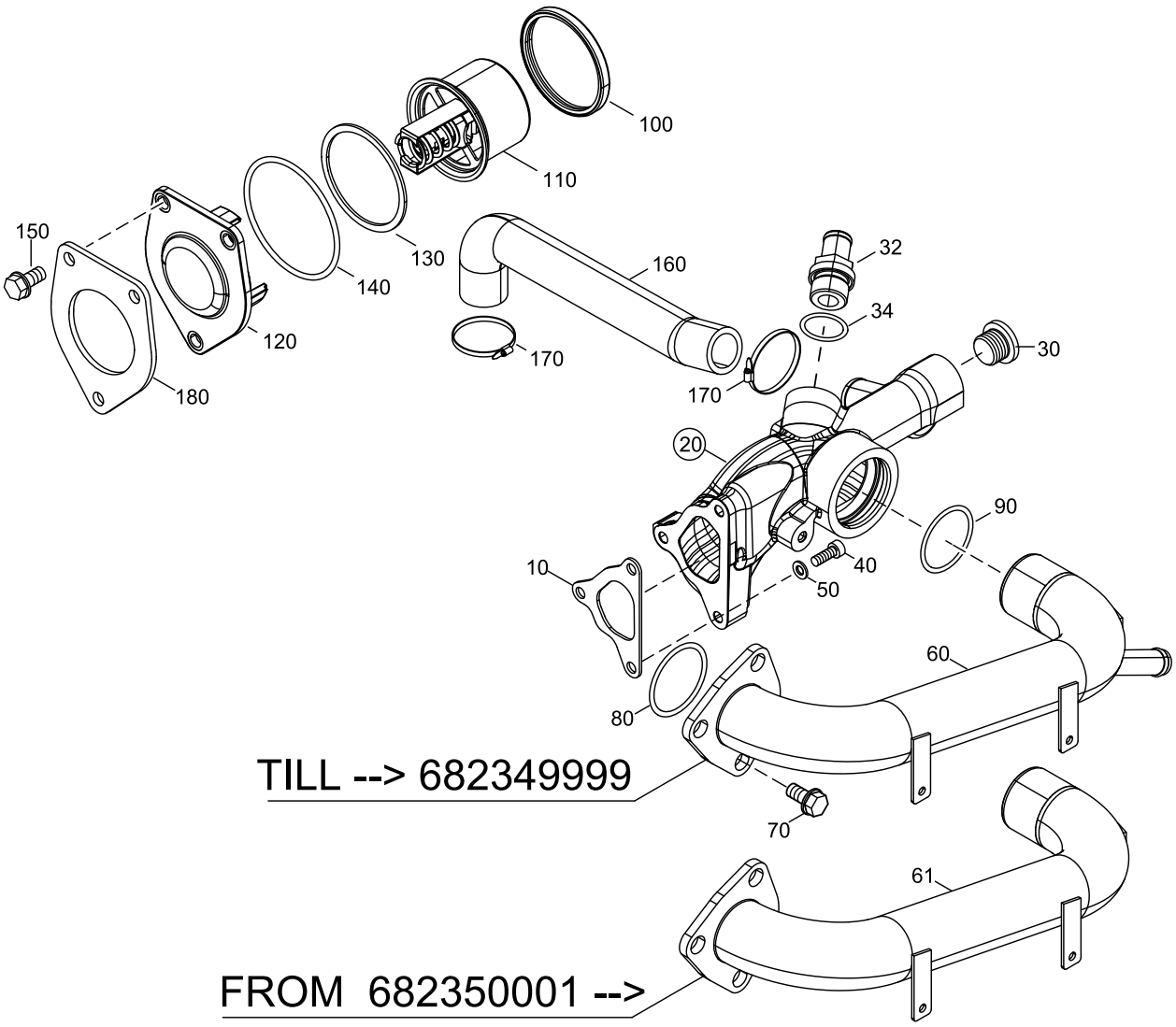

WATERPIPE, THERMOSTAT

SE266 S36 MARINE

05036284-0

Pos.	Part.-No.	Qty	Designation	Step
10	2177572-0	1	GASKET INLET PIPE	.1
20	Z026122-0	1	COOLANT INLET ASSY. (PAINTED)	.1
30	9000590-0	2	SCR.PLUG WITH RUBBER SEAL M22x1,5	.1
32	9000648-0	1	SCREW-IN SOCKET M22x1,5-16	.1
34	9000815-0	1	PROFILED GASKET DIN 3869-22-FPM	.1
40	9001088-0	3	HEX.SOCK. SCR. ISO 4762-M6x25-A2-70	.1
50	3930070-0	3	WASHER ISO 7089-6-140HV-A2	.1
60	2180524-0	1	PIPE, COOLING —>682349999	.1
61	701260	1	PIPE, COOLING 682350001—>	.1
70	9000271-0	3	HEX.FLANGE BOLT EN 1665-M8x25-10.9-DAC	.1
80	9000986-0	1	O-RING 49,2x3	.1
90	9001090-0	1	O-RING 42x4	.1
100	2180850-0	1	SEALING RING, THERMOSTAT	.1
110	2180758-0	1	THERMOSTAT INLAY	.1
120	2180839-1	1	COVER THERMOSTAT	.1
130	2180921-0	1	DISTANCE WASHER	.1
140	9001169-0	1	O-RING 78x2,5	.1
150	9000271-0	3	HEX.FLANGE BOLT EN 1665-M8x25-10.9-DAC	.1
160	2180823-0	1	MOULDED HOSE, OIL COOLER-OUTLET	.1
170	2177464-0	2	CLAMP 20-32/12	.1
180	2181205-0	1	HOLDING PLATE	.1

SE266 S36 MARINE

WATERPUMP

05046284-0

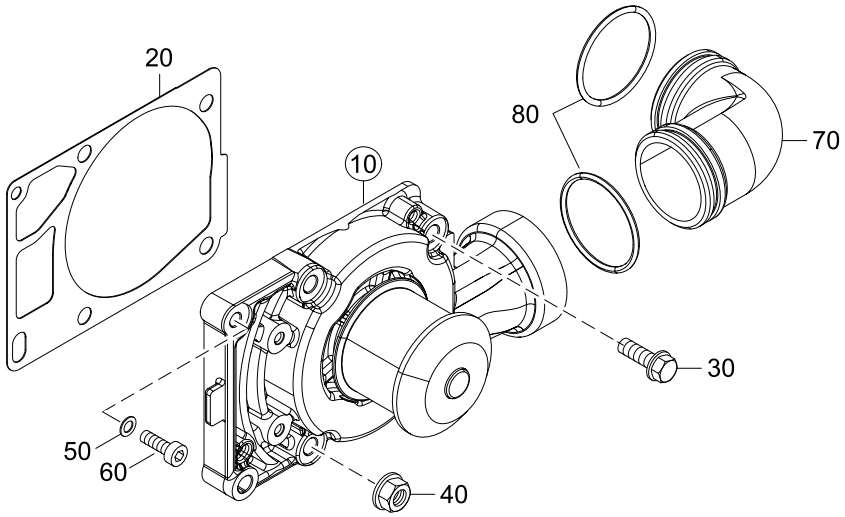

WATERPUMP

SE266 S36 MARINE

05046284-0

Pos.	Part.-No.	Qty	Designation	Step
10	Z026123-0	1	WATER PUMP ASSY. (WITH GASKET)	.1
20	2177329-3	1	GASKET WATERPUMP HOUSING	..2
30	9000431-0	4	HEX.FLANGE BOLT EN 1665-M8x30-10.9-DAC	.1
40	9000056-1	1	HEX.FLANGE NUT EN 1661-M8-8-A2C	.1
50	3932008-0	1	SPRING WASHER DIN 137-B6-FST-A3C	.1
60	3862327-0	1	HEX.SOCK. SCR. ISO 4762-M6x25-8.8-A2C	.1
70	2180827-1	1	CONNECTOR, WATERPUMP - OIL MODULE	.1
80	9001359-0	2	O-RING 46x3,2	.1

SE266 S36 MARINE

DRIVE BELTS, PULLEYS, TENSIONER

05056284-0

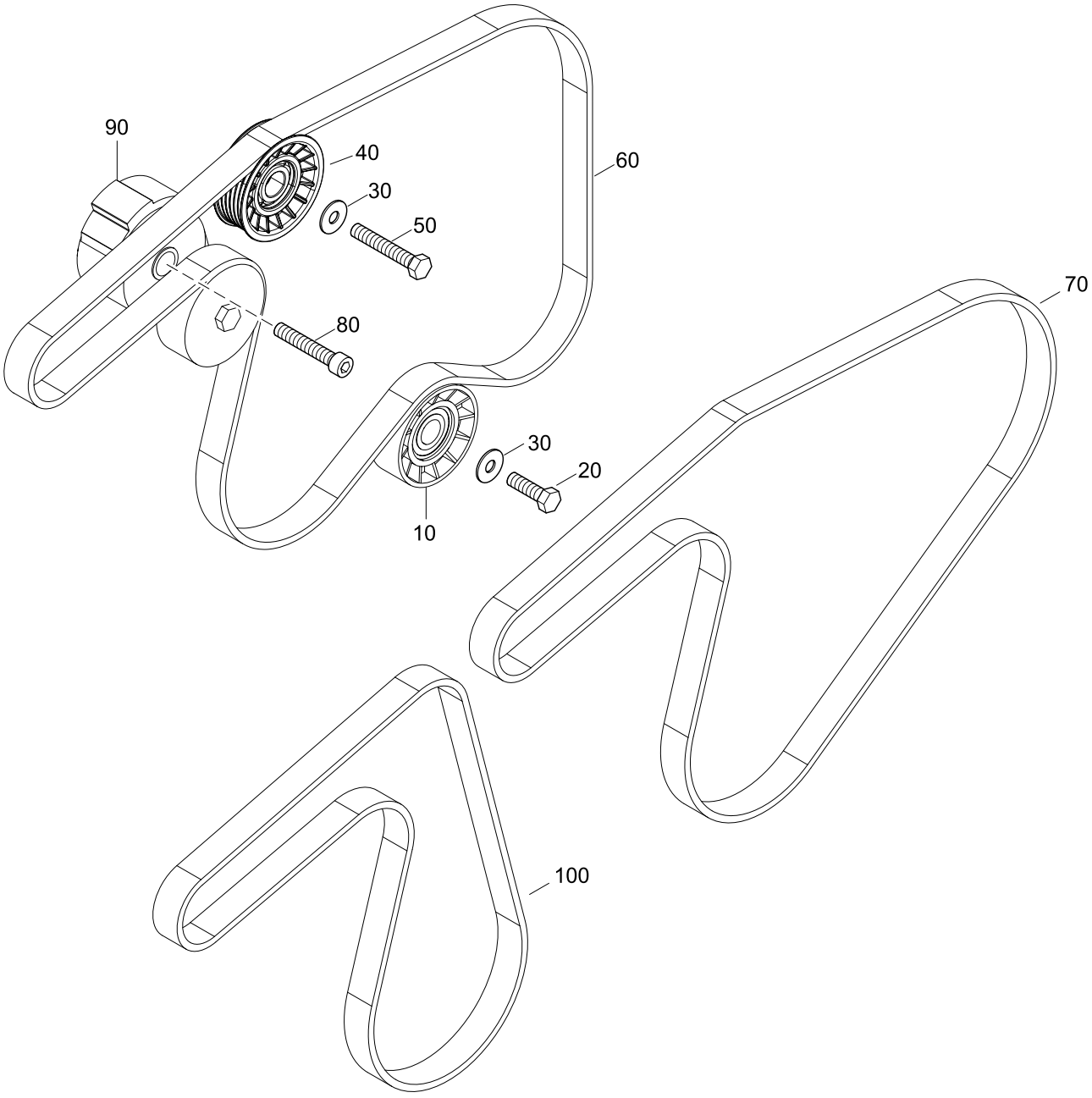

DRIVE BELTS, PULLEYS, TENSIONER

SE266 S36 MARINE

05056284-0

Pos.	Part.-No.	Qty	Designation	Step
10	2203559-1	1	IDLER PULLEY	.1
20	3802527-0	1	HEX.HD.SCR. ISO 4017-M10x30-A4	.1
30	3936107-0	2	WASHER ISO 7093-10,5-140HV-A4	.1
40	2180696-0	1	IDLER PULLEY ASSY.	.1
50	900051	1	HEX.HD.BOLT ISO 4017-M10x50-A4-70	.1
60	2180887-0	1	POLY-V BELT L=1488 6PK	.1
70	2180927-0	1	POLY-V BELT L=1390 6PK	.1
80	9000014-1	1	HEX.SOCK. SCR. ISO 4762-M10x50-10.9-A3C	.1
90	2205423-0	1	TENSIONER POLY-V BELT	.1
100	2180926-0	1	POLY-V BELT L=1095 6PK	.1

SE266 S36 MARINE

RAW WATER PUMP

05106284-0

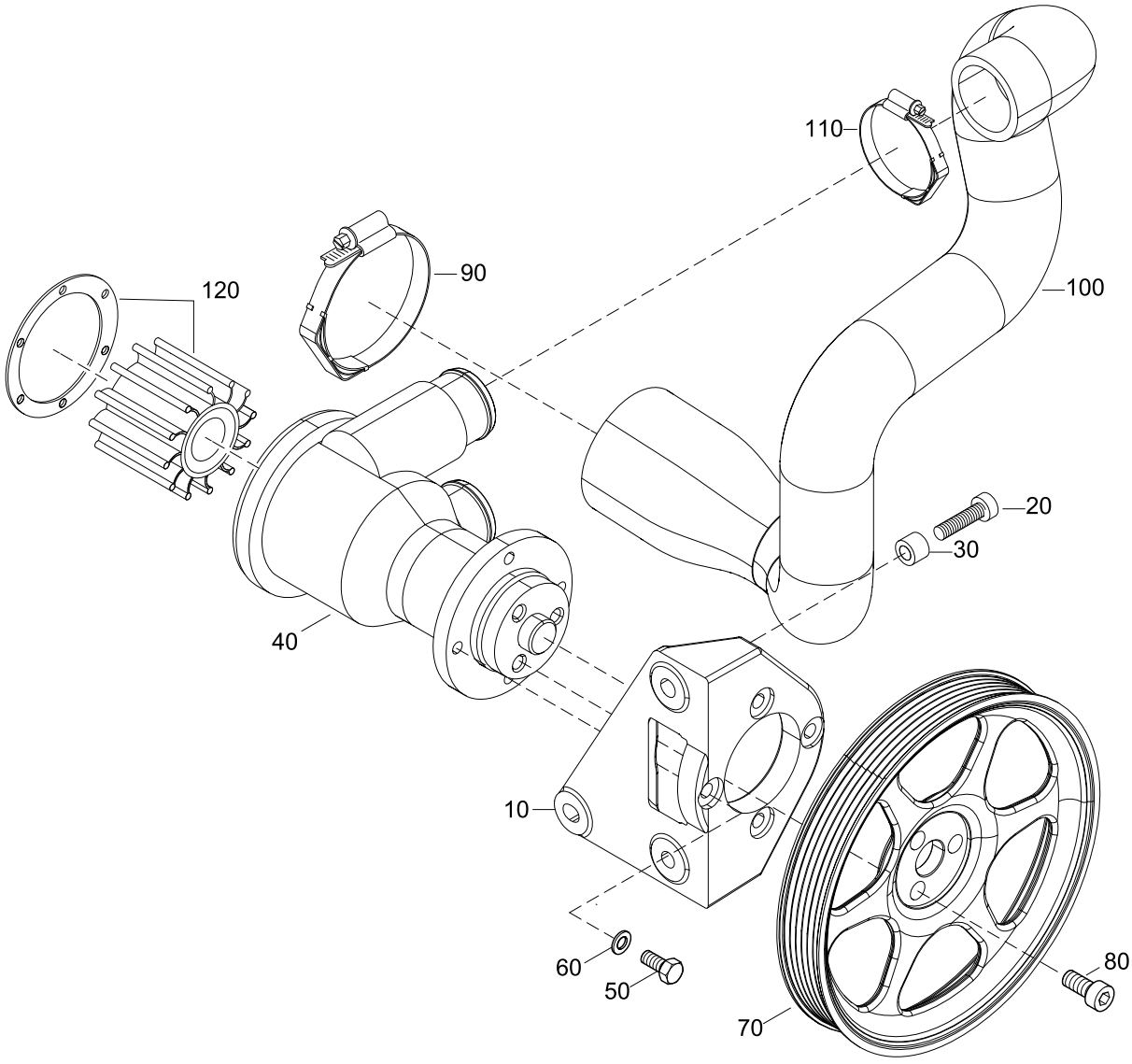

RAW WATER PUMP

SE266 S36 MARINE

05106284-0

Pos.	Part.-No.	Qty	Designation	Step
10	2180983-0	1	BRACKET, RAW WATER PUMP PAINTED	.1
20	9000697-0	3	HEX.SOCK. SCR. ISO 4762-M8x45-A2-70	.1
30	2200868-0	3	BUSHING, OIL COOLER	.1
40	2203714-8	1	RAW WATER PUMP (PAINTED)	.1
50	3800221-0	4	HEX.HD.SCR. ISO 4017-M6x20-A2-70	.1
60	3930070-0	4	WASHER ISO 7089-6-140HV-A2	.1
70	2179911-0	1	PULLEY, RAW WATER PUMP	.1
80	3860152-0	3	HEX.SOCK. SCR. ISO 4762-M8x16-A2-70	.1
90	2179022-0	1	HOSE CLAMP WITH SPRING 50-70/9	.1
100	2180890-0	1	MOLDED HOSE	.1
110	2179044-0	1	HOSE CLAMP WITH SPRING 25-40/9	.1
120	Z011753-2	1	SERVICE KIT, RAW WATER PUMP (W. GREASE)	.1

SE266 S36 MARINE

RAW WATER PIPES

05126284-0

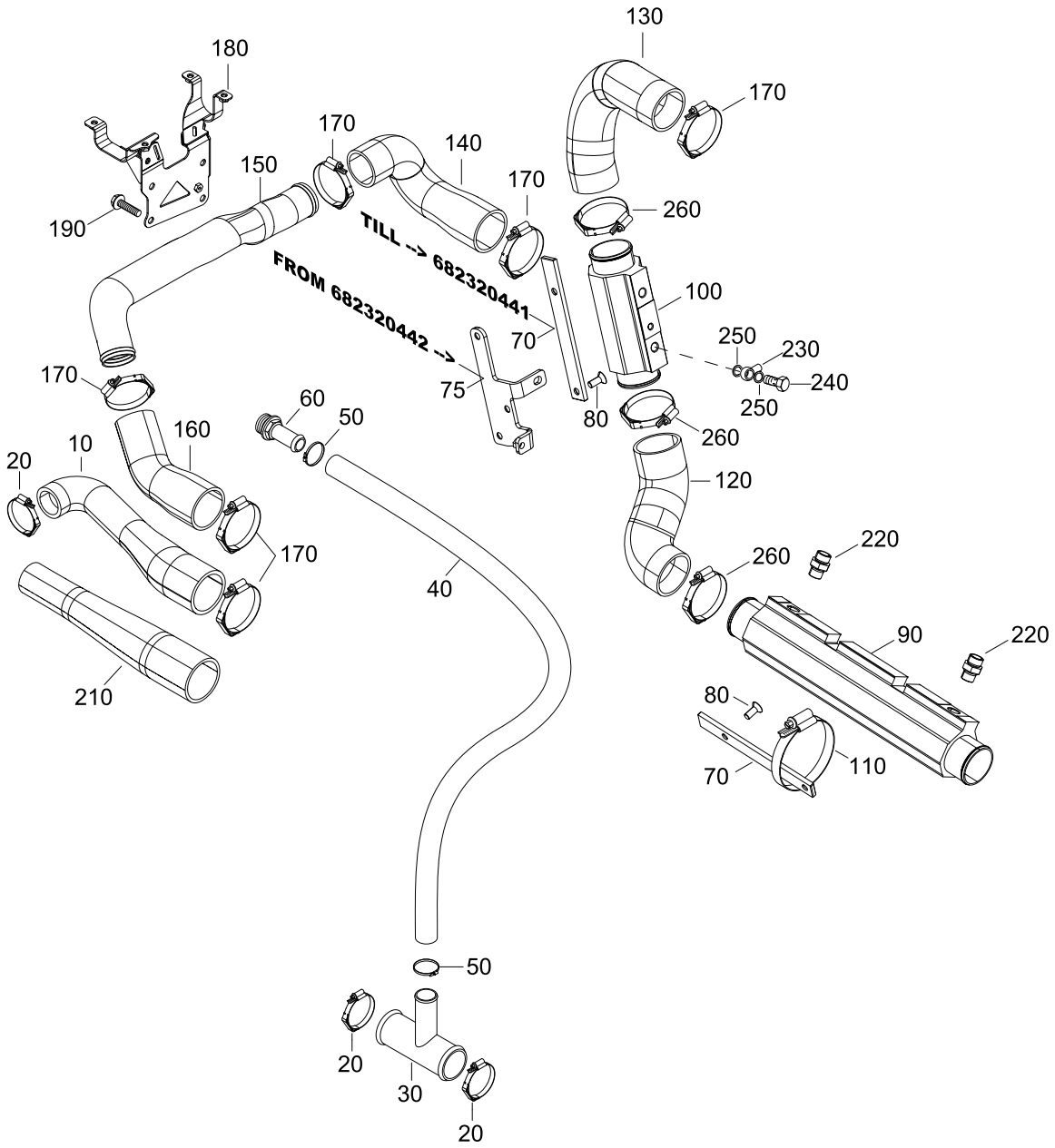

RAW WATER PIPES

SE266 S36 MARINE

05126284-0

Pos.	Part.-No.	Qty	Designation	Step
10	Z026170-0	1	MOULDED HOSE, HEAT EXCHA. - ELBOW EXH.	.1
20	2181430-0	3	HOSE CLAMP WITH SPRING 30-45/9	.1
30	2040095-2	1	PIPE ENGINE-COOLANT 32/19	.1
40	2179330-1	1	HOSE RAW WATER 20x2000	.1
50	2177464-0	2	CLAMP 20-32/12	.1
60	9000468-1	1	SCREW IN SOCKET	.1
70	2180814-0	1	MOUNTING PLATE	.1
75	2181195-0	1	BRACKET, FUEL COOLER	.1
80	9000456-0	3	COUNTERS. SCR. DIN 7991-M8x20-10.9-A2C	.1
90	Z026124-0	1	GEAR OIL COOLER (PAINTED)	.1
100	Z026125-0	1	FUEL COOLER (PAINTED)	.1
110	2179929-0	3	HOSE CLAMP 60-80/12	.1
120	2180645-0	1	MOLDED HOSE	.1
130	2180646-0	1	MOLDED HOSE	.1
140	2180995-0	1	MOULDED HOSE	.1
150	2180841-0	1	TUBE AIR COOLER-HEAT EXCHANGER	.1
160	2180994-0	1	MOULDED HOSE	.1
170	2179050-0	7	HOSE CLAMP WITH SPRING 40-60/9	.1
180	2180923-0	1	BRACKET, RAW WATER PIPE	.1
190	9000305-0	3	HEX.FLANGE BOLT EN 1665-M8x20-10.9-DAC	.1
210	Z026169-0	1	MOULDED HOSE, HEAT EXCHA. - ELBOW EXH.	.1
220	9000832-0	2	PIPE UNION ADAP. DIN 3901-L12A-M-ST	.1
230	9001148-0	1	BANJO DM12	.1
240	11868	1	HOLLOW SCREW M12x1,5 DIN 7643-8-3-A3C	.1
250	3098013-0	2	SEALING RING DIN 7603-A12x18-CU	.1
260	2179022-0	3	HOSE CLAMP WITH SPRING 50-70/9	.1

STEYRMOTORS
INNOVATION WITH LIGHTNESS

SE266 S36 MARINE

ALTERNATOR 14V / 120A

06016284-0

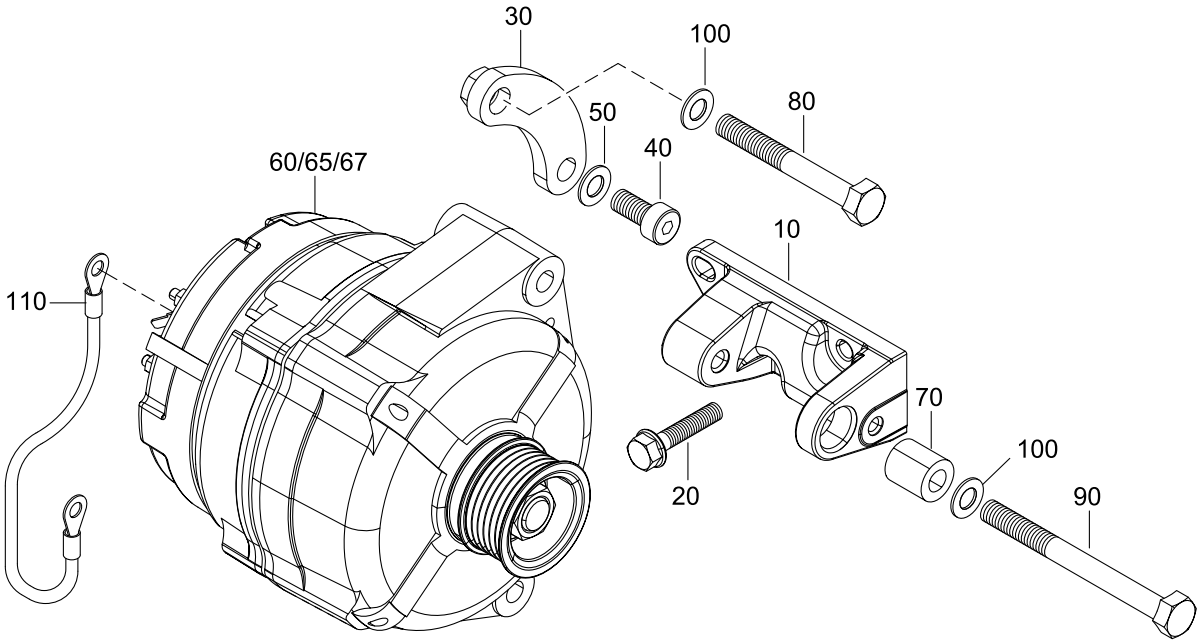

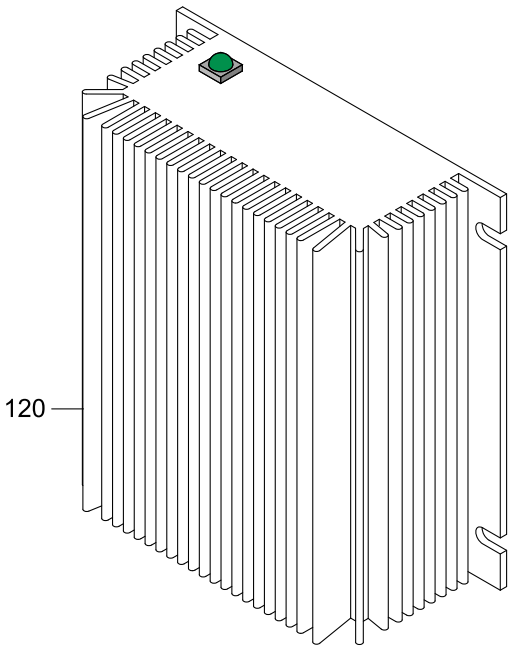

ALTERNATOR 14V / 120A

SE266 S36 MARINE

06016284-0

Pos.	Part.-No.	Qty	Designation	Step
10	Z026126-0	1	BRACKET, ALTERNATOR (PAINTED)	.1
20	9000271-0	3	HEX.FLANGE BOLT EN 1665-M8x25-10.9-DAC	.1
30	2180987-0	1	HOLDING PLATE, ALTERNATOR	.1
40	9000511-0	1	HEX.SOCK. SCR. ISO 4762-M10x25-12.9	.1
50	3930271-0	1	WASHER ISO 7089-10-140HV-A3C	.1
60	Z026127-0	1	ALTERNATOR ASSY. 14V-120A (PAINTED)	.1
65	Z026141-0	1	ALTERN. ASSY. 14V-150A (OPTION)(PAINTED)	.1
67	Z026143-0	1	ALTERN. ASSY. 28V-100A (OPTION)(PAINTED)	.1
70	2180794-0	1	CLAMPING SLEEVE, ALTERNATOR	.1
80	3800571-0	1	HEX.HD.BOLT ISO 4014-M10x80-8.8-A3C	.1
90	3800568-0	1	HEX.HD.BOLT ISO 4014-M10x100-8.8-A3C	.1
100	3930271-0	2	WASHER ISO 7089-10-140HV-A3C	.1
110	2178968-0	1	GROUND WIRE	.1
120	2179789-0	1	DC/DC CONVERTER 24 -12V / 30A	.1

SE266 S36
MARINE

STARTER

06036284-0

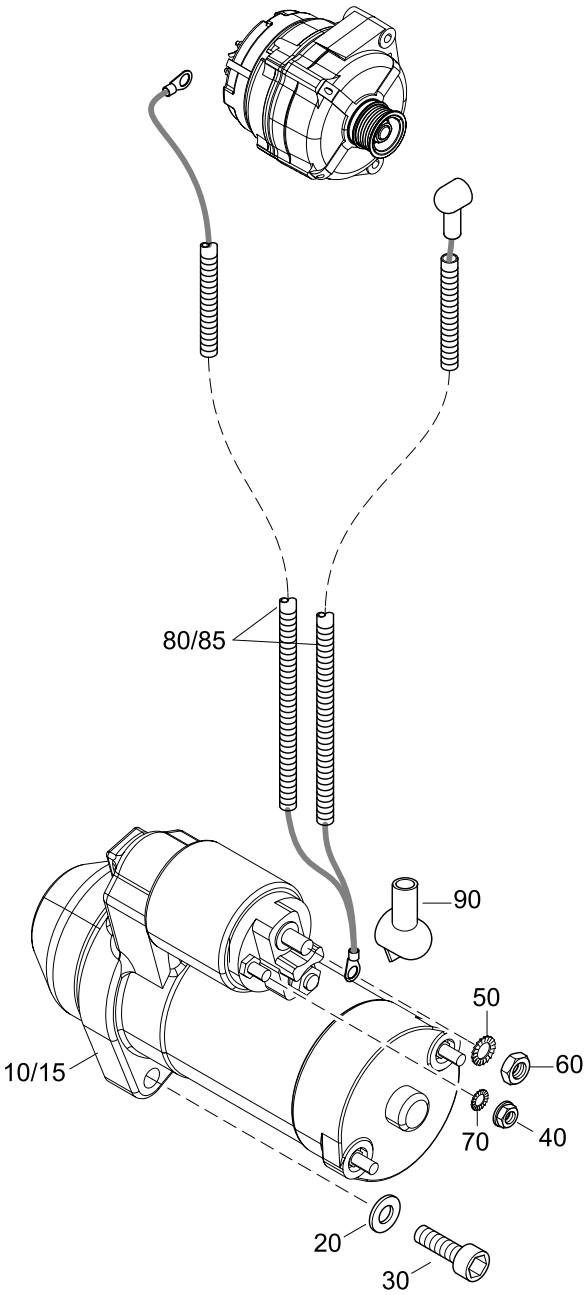

STARTER

SE266 S36 MARINE

06036284-0

Pos.	Part.-No.	Qty	Designation	Step
10	2040077-8	1	STARTER 12V (STANDARD) (PAINTED)	.1
15	Z026142-0	1	STARTER 24V (OPTION) (PAINTED)	.1
20	3932025-0	2	SPRING WASHER DIN 137-A10-FST-A3C	.1
30	3860149-0	2	HEX.SOCK. SCR. ISO 4762-M10x40-8.8-A3C	.1
40	3870050-0	1	HEX.NUT ISO 4032-M5-A2-70	.1
50	9000013-0	1	TOOTHED LOCK WASHER DIN 6797-A8.4	.1
60	3870045-0	1	HEX.NUT ISO 4032-M8-A2-70	.1
70	9000040-0	1	TOOTHED LOCK WASHER DIN 6797-A5.3	.1
80	2180898-0	1	HARNESS STARTER 12V (STANDARD)	.1
85	2180899-0	1	HARNESS STARTER 24V (OPTION)	.1
90	O910111-0	1	RUBBER PROTECTION CAP	.1

SE266 S36 MARINE

ENGINE HARNESS

06056284-0

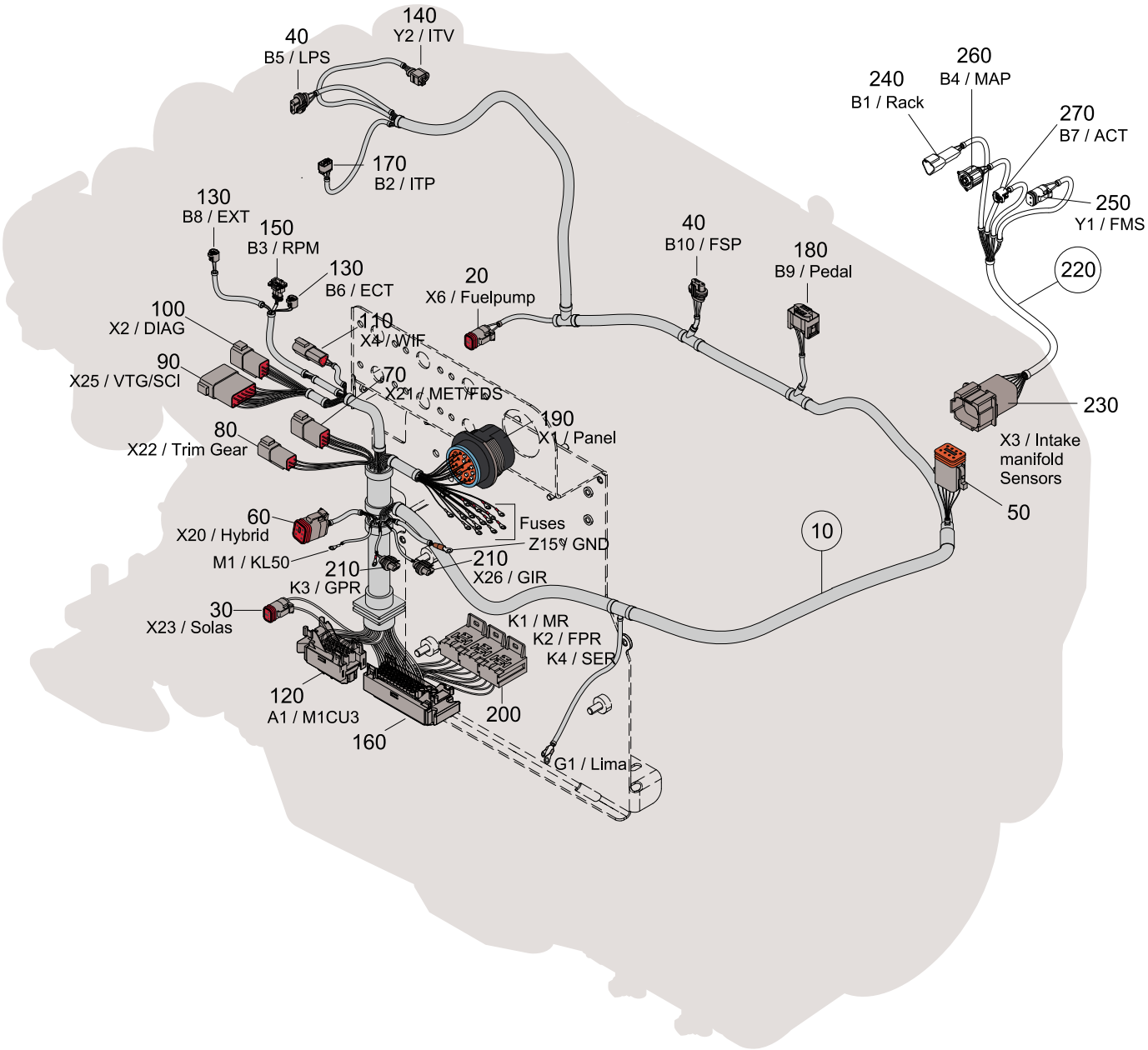

ENGINE HARNESS

SE266 S36 MARINE

06056284-0

Pos.	Part.-No.	Qty	Designation	Step
10	Z026128-0	1	ENGINE HARNESS ASSY. INCL. BASE PLATE	.1
20	Z002417-1	1	PLUG COMPLETE 2-POLE	.1
30	Z002417-0	1	PLUG COMPLETE 2-POLE	.1
40	Z002203-0	2	PLUG COMPLETE 3-POLE	.1
50	Z002204-0	1	PLUG COMPLETE 8-POLE	.1
60	Z002649-0	1	PLUG COMPLETE 6-POLE	.1
70	Z002415-0	1	PLUG COMPLETE 6-POLE	.1
80	Z002205-0	1	PLUG COMPLETE 4-POLE	.1
90	Z002206-0	1	PLUG COMPLETE 12-POLE	.1
100	Z002211-0	1	PLUG COMPLETE 6-POLE	.1
110	Z002416-0	1	PLUG COMPLETE 3-POLE	.1
120	Z002207-0	1	PLUG COMPLETE 28-POLE	.1
130	Z002208-0	2	PLUG COMPLETE 2-POLE	.1
140	Z002645-0	1	PLUG COMPLETE 2-POLE	.1
150	Z002412-0	1	PLUG COMPLETE 3-POLE	.1
160	Z002209-0	1	PLUG COMPLETE 52-POLE	.1
170	Z002643-0	1	PLUG COMPLETE 4-POLE	.1
180	Z002414-2	1	PLUG COMPLETE 6-POLE	.1
190	Z002410-A	1	PLUG COMPLETE 23-POLE	.1
200	9000421-0	3	RELAY SOCKET	.1
210	Z002210-0	2	PLUG COMPLETE 2-POLE	.1
220	Z026129-0	1	HARNESS ASSY., INTAKE MANIFOLD	.1
230	Z002092-0	1	PLUG COMPLETE 8-POLE	.1
240	Z002416-0	1	PLUG COMPLETE 3-POLE	.1
250	Z002417-0	1	PLUG COMPLETE 2-POLE	.1
260	Z002139-0	1	PLUG COMPLETE 3-POLE	.1
270	Z002208-0	1	PLUG COMPLETE 2-POLE	.1

SE266 S36 MARINE

SECURETYSYSTEM, FUSES, ECU, E-BOX

06066284-4

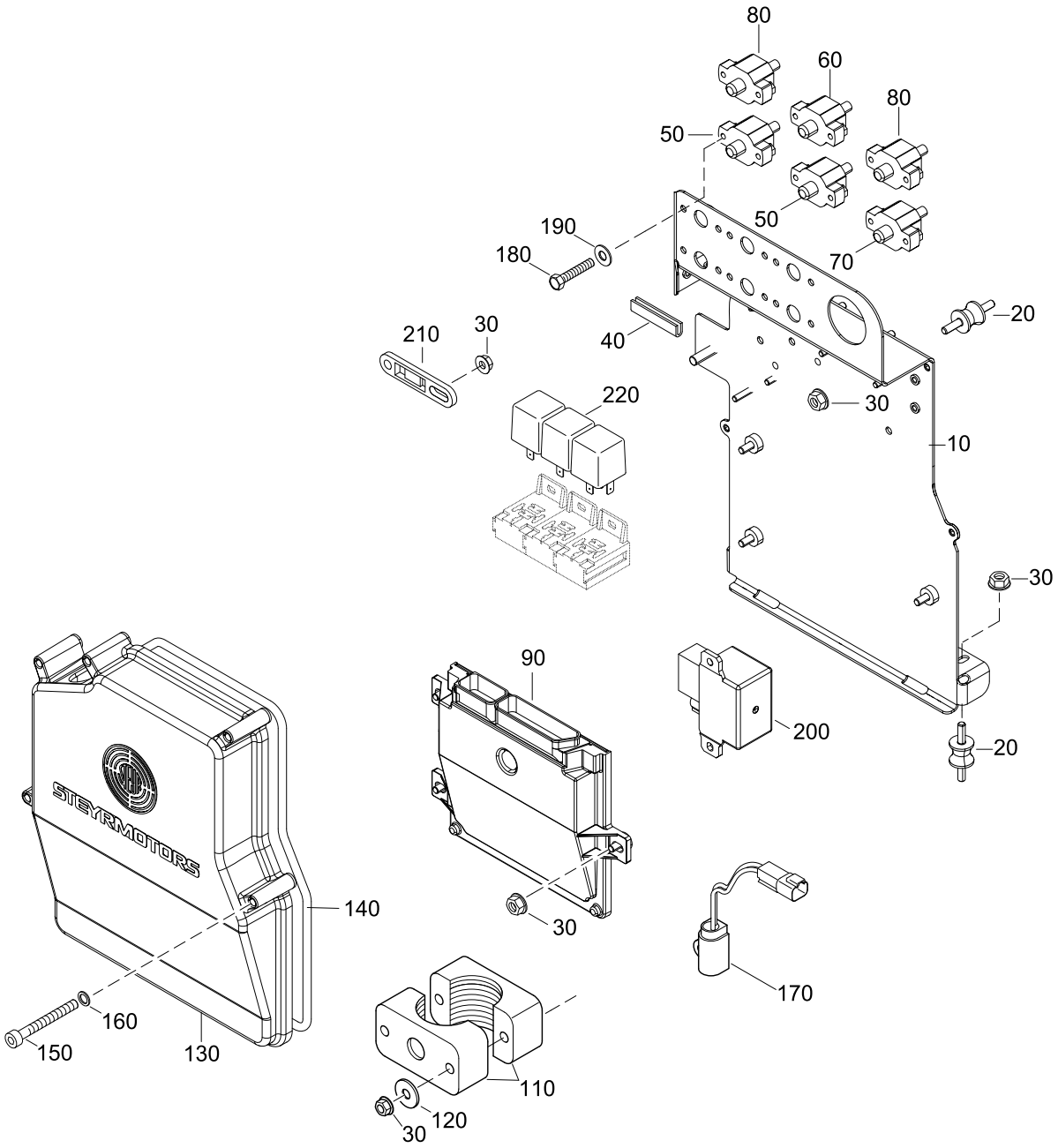

SECURETYSYSTEM, FUSES, ECU, E-BOX

SE266 S36
MARINE

06066284-4

Pos.	Part.-No.	Qty	Designation	Step
10	2180845-0	1	BASE PLATE	.2
20	2203744-0	4	RUBBER MOUNT	.2
30	3880049-0	17	HEX.FLANGE NUT DIN 6923-M6-A2-70	.2
40	2173329-0	0.05	EDGE PROTECTOR	.2
50	O913774-0	2	AUTOMATIC CIRCUIT BREAKER 50A	.2
60	2181039-0	1	AUTOMATIC CIRCUIT BREAKER 25A	.2
70	O986525-0	1	AUTOMATIC CIRCUIT BREAKER 12.5A	.2
80	2181040-0	2	AUTOMATIC CIRCUIT BREAKER 20A	.2
90	2181062-0	1	ENGINE CONTROL UNIT SE266S36	.2
110	2203753-0	2	CLAMP, FASTEN ENGINE-HARNESS	.2
120	9000012-0	10	WASHER LARGE SERIES DIN 9021-6.4-140HV-A2	.2
130	2181005-0	1	ASSY. COVERING, ENGINE ELECTRIC	.2
140	2171410-1	1	SEAL, COVERING ENGINE ELECTRIC	..3
150	9000003-0	5	HEX.SOCK. HD.CAP SCR. DIN 912-M5x55-A2-70	.2
160	3930069-0	8	WASHER ISO 7089-5-200HV-A2	.2
170	2178971-G	1	INVERSION-SWITCH ASSY	.2
180	9000424-0	12	HEX.HD.SCR. ISO 4017-8/32UNCx20-A2-70	.2
190	3930072-0	12	WASHER LARGE SERIES DIN 9021-4.3-A2	.2
200	9000947-1	1	RELAY 12V-150A-IP67	.2
210	2178870-0	2	FIXTURE, CABLE TIE	.2
220	9000183-0	3	RELAY 12V 40A	.2

SE266 S36
MARINE

INSTRUMENTPANEL (2009 - 2013/08)

06072184-1

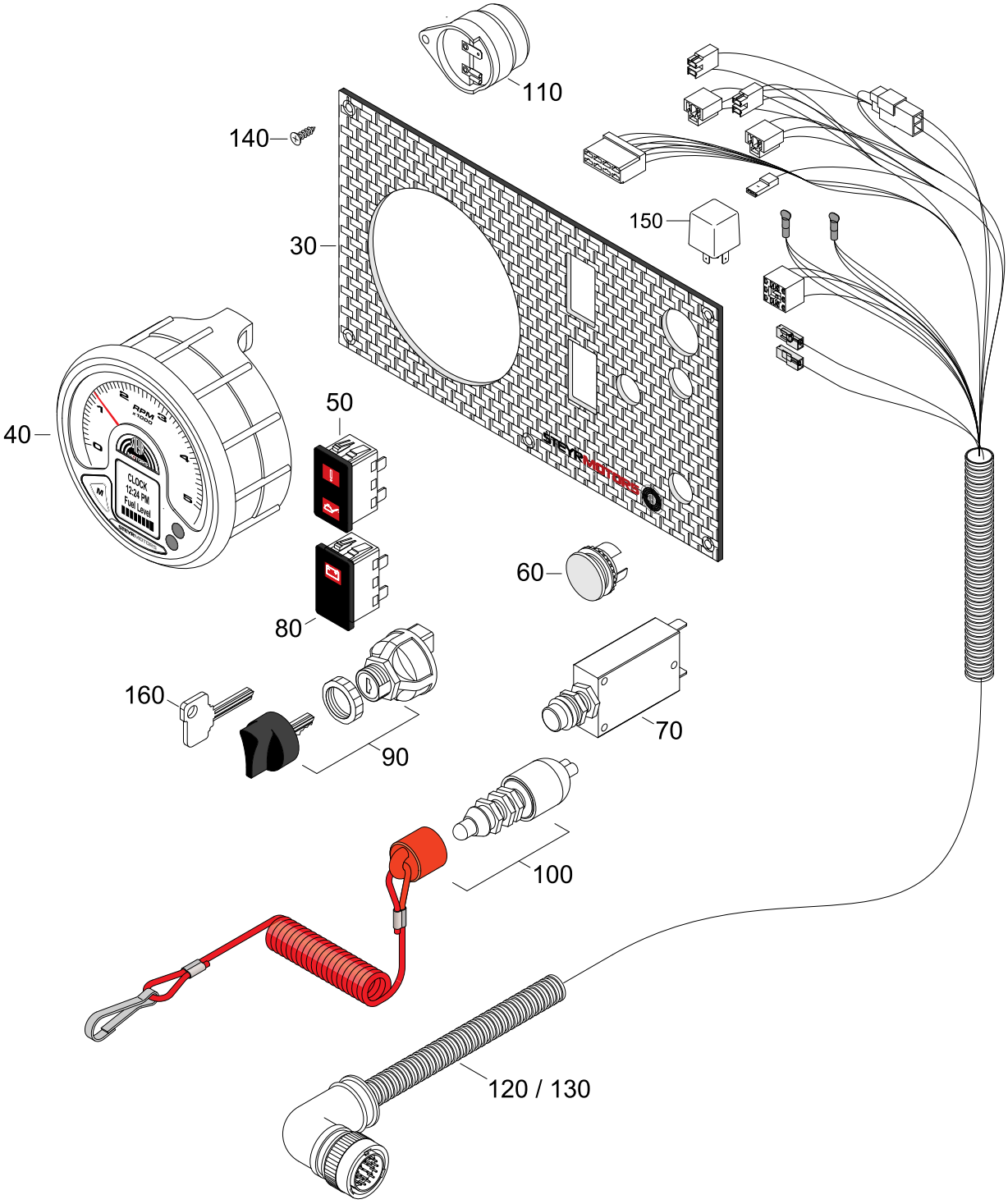

INSTRUMENTPANEL (2009 - 2013/08)

SE266 S36 MARINE

06072184-1

Pos.	Part.-No.	Qty	Designation	Step
30	2179981-0	1	FRONT PLATE, INSTRUMENT PANEL - STANDARD	.1
40	Z001149-0	1	REVOLUTION COUNTER	.1
50	Z002196-0	1	WARNING LIGHT, OIL PRESSURE & CHECK ENG.	.1
60	2179320-0	1	BLIND PLUG	.1
70	Z002180-0	1	THERMO PROTECTION SWITCH ASSY.	.1
80	Z002197-0	1	WARNING LIGHT, BATTERY CHARGE	.1
90	2179975-0	1	GLOW-START SWITCH	.1
100	2179978-0	1	EMERGENCY CUTOFF SWITCH	.1
110	2178760-1	1	HORN AUDIBLE WARNING	.1
120	2180073-0	1	CABLE ASSY. INSTRUMENT 7m	.1
130	2180075-0	1	CABLE ASSY. INSTRUMENT 1,5m	.1
140	9000817-0	6	CR.REC.COUNT.SUNK HD.TPG.SCR. 3.5x16	.1
150	9000183-0	1	RELAY 12V 40A	.1
160	2181496-0	1	IGNITION KEY, BLANK PART	.1

STEYRMOTORS
INNOVATION WITH LIGHTNESS

SE266 S36
MARINE

INSTRUMENTPANEL (FROM 2013/08 -->)

06072184-2

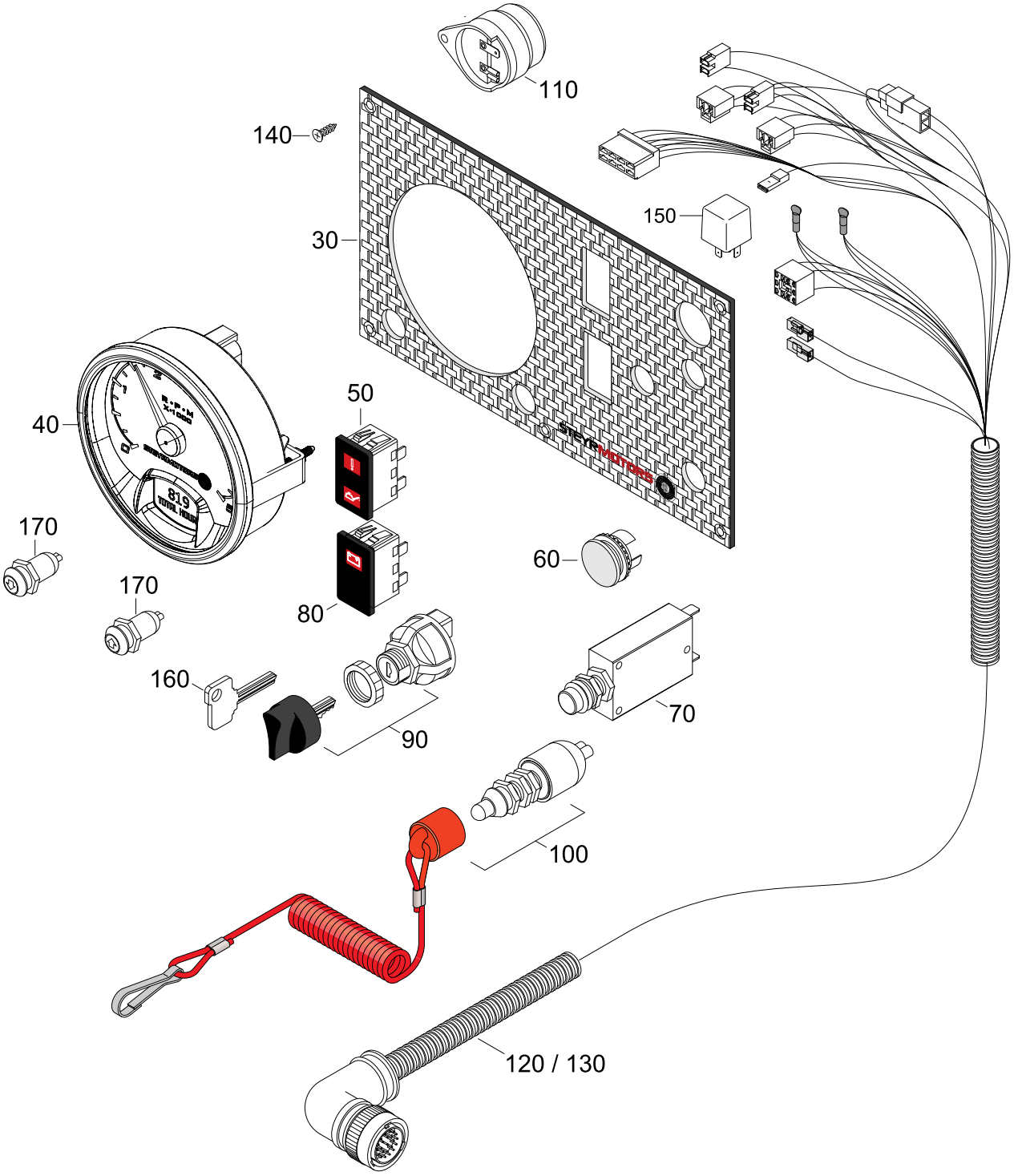

INSTRUMENTPANEL (FROM 2013/08 -->)

SE266 S36 MARINE

06072184-2

Pos.	Part.-No.	Qty	Designation	Step
30	2181436-0	1	FRONT PLATE, INSTRUMENT PANEL - STANDARD	.1
40	2181437-0	1	REVOLUTION COUNTER	.1
50	Z002196-0	1	WARNING LIGHT, OIL PRESSURE & CHECK ENG.	.1
60	2179320-0	1	BLIND PLUG	.1
70	Z002180-0	1	THERMO PROTECTION SWITCH ASSY.	.1
80	Z002197-0	1	WARNING LIGHT, BATTERY CHARGE	.1
90	2179975-0	1	GLOW-START SWITCH	.1
100	2179978-0	1	EMERGENCY CUTOFF SWITCH	.1
110	2178760-1	1	HORN AUDIBLE WARNING	.1
120	2181438-0	1	CABLE ASSY. INSTRUMENT 7m	.1
130	2181444-0	1	CABLE ASSY. INSTRUMENT 1,5m	.1
140	9000817-0	6	CR.REC.COUNT.SUNK HD.TPG.SCR. 3.5x16	.1
150	9000183-0	1	RELAY 12V 40A	.1
160	2181496-0	1	IGNITION KEY, BLANK PART	.1
170	2181439-0	2	TASTER RPM GAUGE UP/DOWN	.1

SE266 S36
MARINE

INSTRUMENTPANEL SOLAS (2009 - 2013/08)

06092184-1

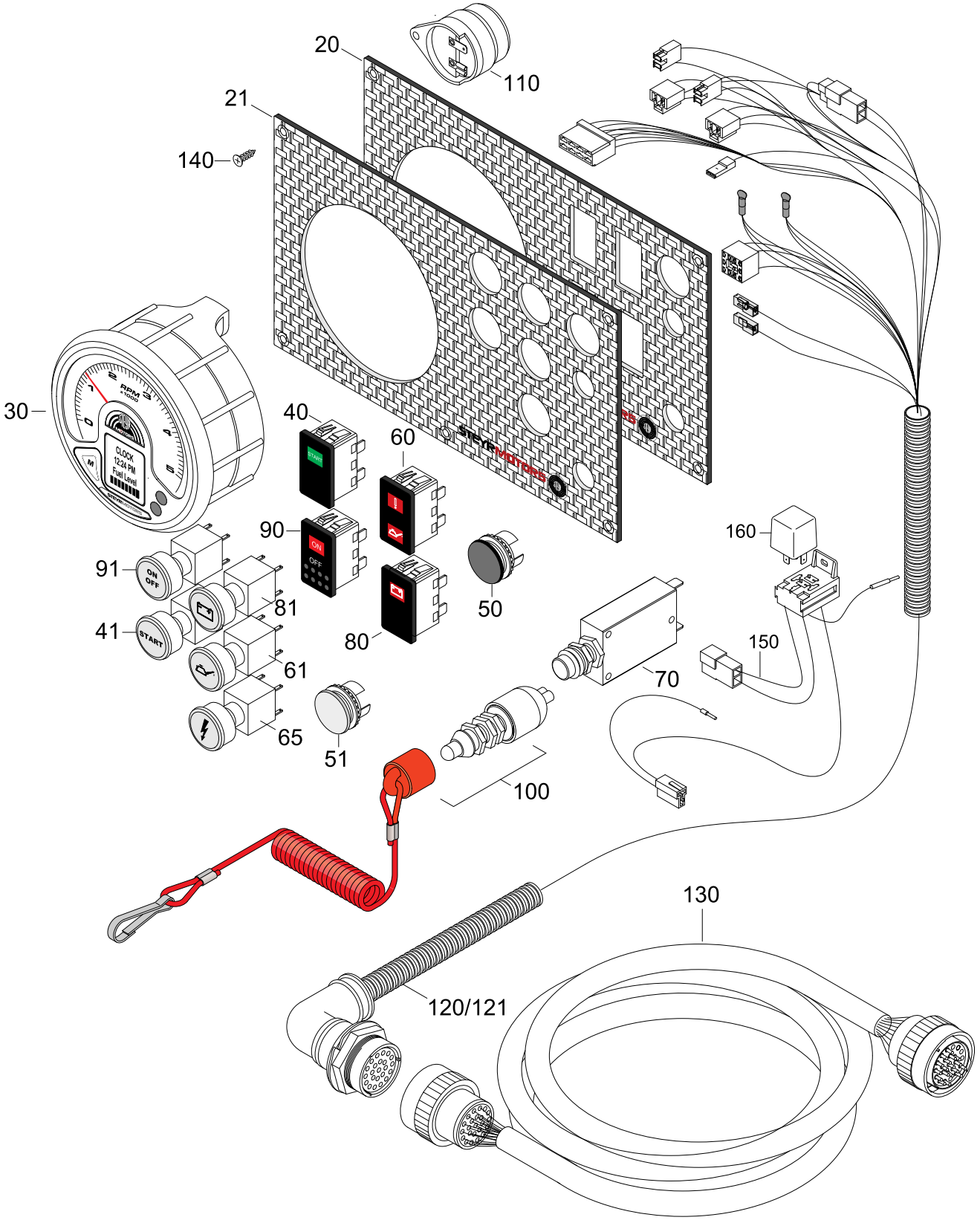

INSTRUMENTPANEL SOLAS (2009 - 2013/08)

SE266 S36 MARINE

06092184-1

Pos.	Part.-No.	Qty	Designation	Step
20	2179982-0	1	FRONT PLATE, INSTRUMENT PANEL - SOLAS	.1
21	2180795-0	1	FRONT PLATE, INSTRUMENT PANEL - SOLAS	.1
30	Z001150-0	1	REVOLUTION COUNTER	.1
40	Z002198-0	1	START SWITCH, GREEN	.1
41	2180779-0	1	START SWITCH, GREEN	.1
50	2179320-0	1	BLIND PLUG	.1
51	2180797-0	1	BLIND PLUG	.1
60	Z002196-0	1	WARNING LIGHT, OIL PRESSURE & CHECK ENG.	.1
61	2180776-0	1	WARNING LIGHT, OIL PRESSURE	.1
65	2180778-0	1	WARNING LIGHT, CHECK ENGINE	.1
70	Z002180-0	1	THERMO PROTECTION SWITCH ASSY.	.1
80	Z002197-0	1	WARNING LIGHT, BATTERY CHARGE	.1
81	2180777-0	1	WARNING LIGHT, BATTERY CHARGE	.1
90	Z002199-0	1	IGNITION SWITCH	.1
91	2180780-0	1	IGNITION SWITCH	.1
100	2179978-0	1	EMERGENCY CUTOFF SWITCH	.1
110	2178760-1	1	HORN AUDIBLE WARNING	.1
120	2180074-0	1	CABLE ASSY. INSTRUMENT (2009 - 2011/06)	.1
121	2180796-0	1	CABLE ASSY. INSTRUM. (2011/06 - 2013/08)	.1
130	2206291-1	1	INTERMEDIATE CABLE 5m	.1
140	9000817-0	6	CR.REC.COUNT.SUNK HD.TPG.SCR. 3.5x16	.1
150	2180512-0	1	INTERMEDIATE CABLE CHARGE INDICATOR 24V	.1
160	9000183-0	1	RELAY 12V 40A	.1

STEYRMOTORS
INNOVATION WITH LIGHTNESS

SE266 S36 MARINE

INSTRUMENTPANEL SOLAS (FROM 2013/08 -->)

06092184-5

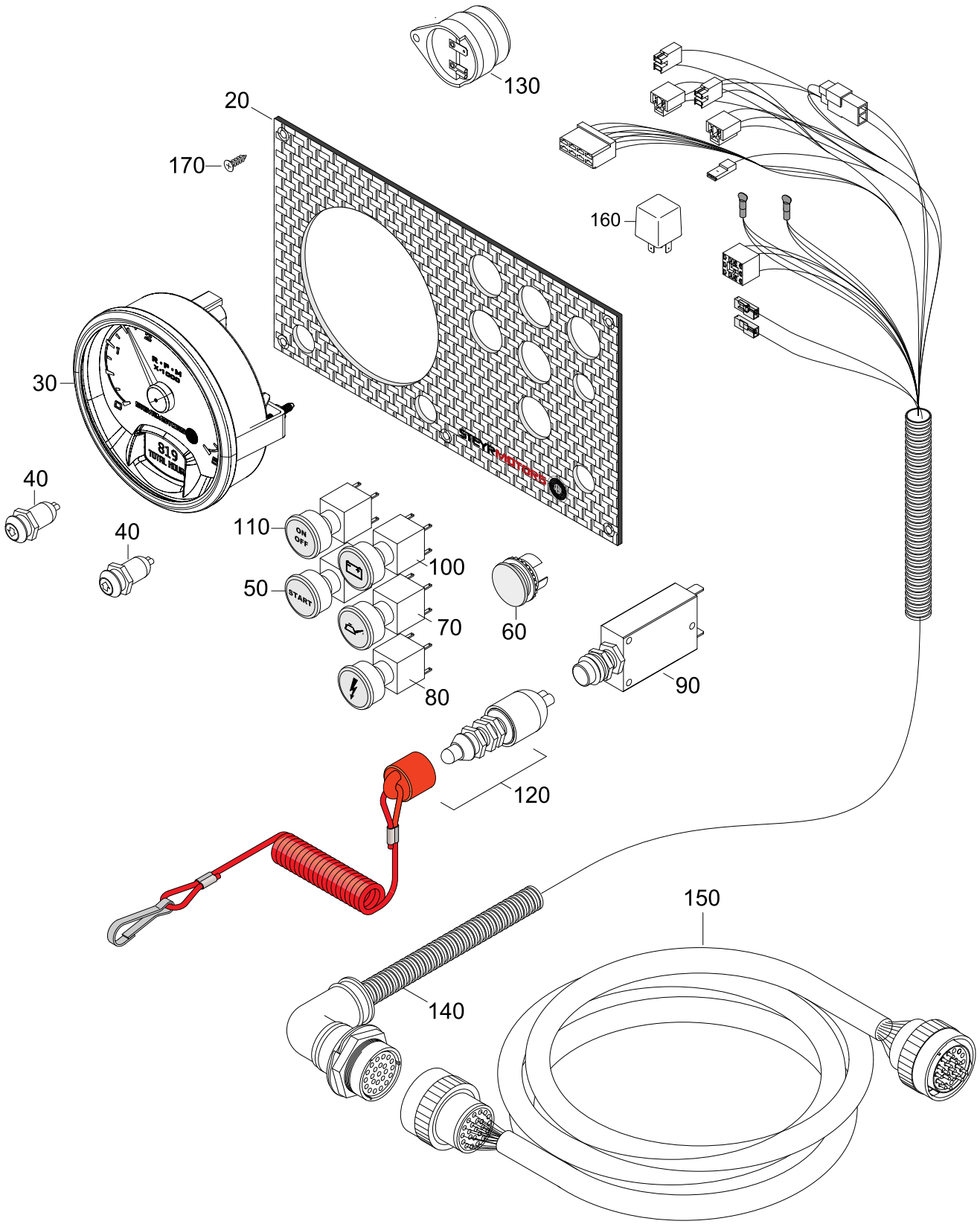

INSTRUMENTPANEL SOLAS (FROM 2013/08 -->)

SE266 S36 MARINE

06092184-5

Pos.	Part.-No.	Qty	Designation	Step
20	2181447-0	1	FRONT PLATE, INSTRUMENT PANEL - SOLAS	.1
30	2181437-0	1	REVOLUTION COUNTER	.1
40	2181439-0	2	TASTER RPM GAUGE UP/DOWN	.1
50	2180779-0	1	START SWITCH, GREEN	.1
60	2180797-0	1	BLIND PLUG	.1
70	2180776-0	1	WARNING LIGHT, OIL PRESSURE	.1
80	2180778-0	1	WARNING LIGHT, CHECK ENGINE	.1
90	Z002180-0	1	THERMO PROTECTION SWITCH ASSY.	.1
100	2180777-0	1	WARNING LIGHT, BATTERY CHARGE	.1
110	2180780-0	1	IGNITION SWITCH	.1
120	2179978-0	1	EMERGENCY CUTOFF SWITCH	.1
130	2178760-1	1	HORN AUDIBLE WARNING	.1
140	2181446-0	1	CABLE ASSY. INSTRUMENT 1,5m SOLAS	.1
150	2206291-1	1	INTERMEDIATE CABLE 5m	.1
160	9000183-0	1	RELAY 12V 40A	.1
170	9000817-0	6	CR.REC.COUNT.SUNK HD.TPG.SCR. 3.5x16	.1

STEYRMOTORS
INNOVATION WITH LIGHTNESS

SE266 S36 MARINE

SCC-DISPLAY

06106184-2

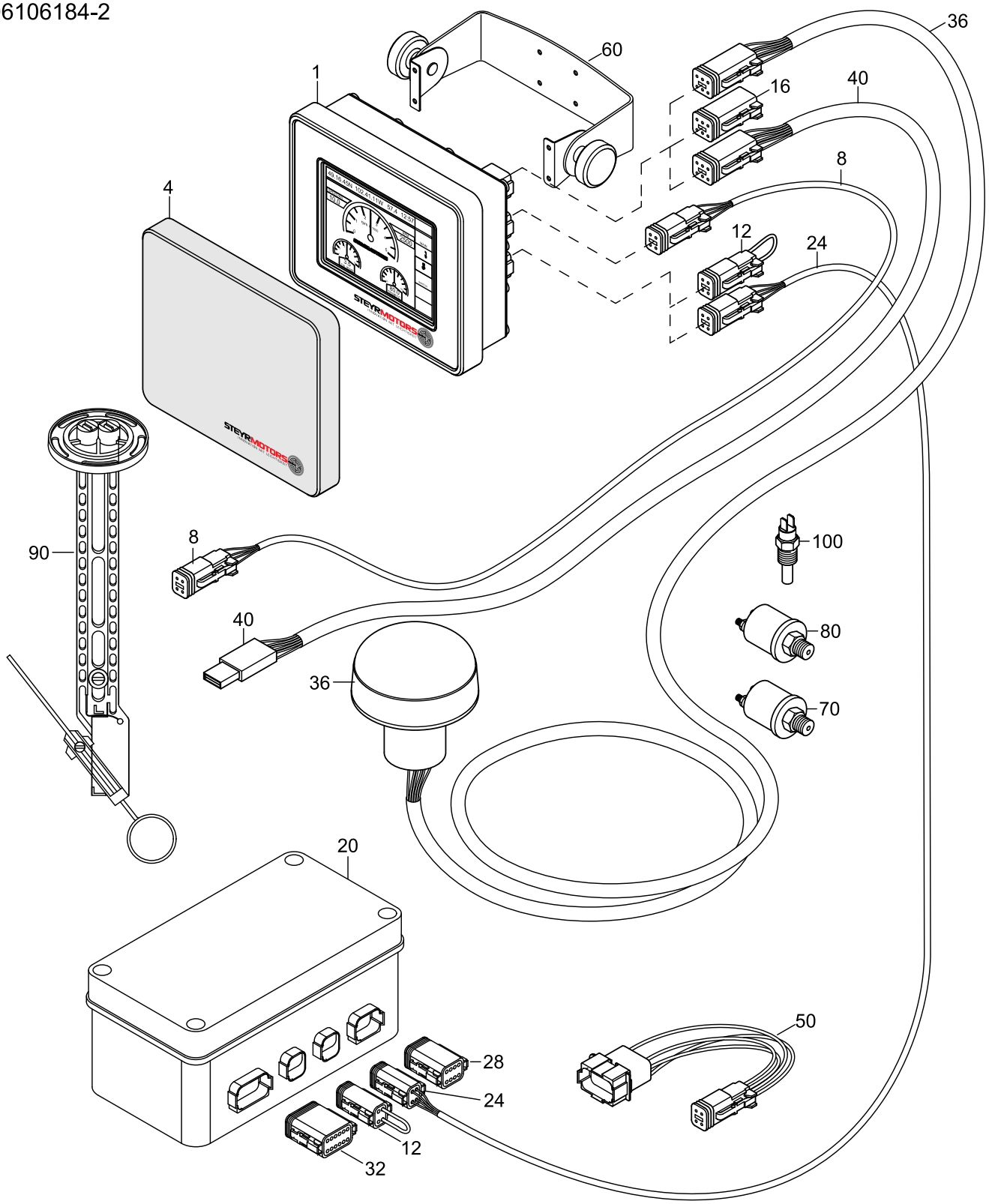

SCC-DISPLAY

SE266 S36 MARINE

06106184-2

Pos.	Part.-No.	Qty	Designation	Step
1	Z002132-0	1	STEYR CONTROL CENTER (SPARE PART)	.1
4	2179637-0	1	PROTECTIVE COVERING - SCC	..2
8	2206313-0	1	SUPPLY CABLE SCC->PANEL (4-POLE)	..2
12	2206314-0	1	CONNECTOR CAN-TERMINATOR (4-POLE)	..2
16	2179638-0	1	DUMMY PLUG 6-POLE	..2
20	2179156-2	1	I/O BOX	.1
24	2206315-0	1	CONNECTING CABLE I/O BOX -> SCC (4-POLE)	..2
28	2179639-0	1	DUMMY PLUG 8-POLE	..2
32	2179640-0	1	DUMMY PLUG 12-POLE	..2
36	2179641-0	1	GPS-SENSOR ASSY	.1
40	2179607-0	1	SCC CONFIGURATIONS CABLE 1,8m USB 2.0	.1
50	2179636-0	1	ADAPTER CABLE SPORTLINE TO SCC	.1
60	Z002177-0	1	KIT MOUNTING BRACHETS F. SCC	.1
70	Z002640-0	1	OIL PRESSURE SENSOR 2-POLE (ACCESSORY)	.1
80	2179519-0	1	OIL PRESSURE SENSOR ZF-GEARBOX	.1
90	2179331-0	1	FUEL TANK SENSOR	.1
100	2179520-0	1	TEMPERATURE SENSOR, GEARBOX OIL	.1

STEYRMOTORS
INNOVATION WITH LIGHTNESS

SE266 S36
MARINE

SWITCH PANEL FOR DISPLAY

06112184-1

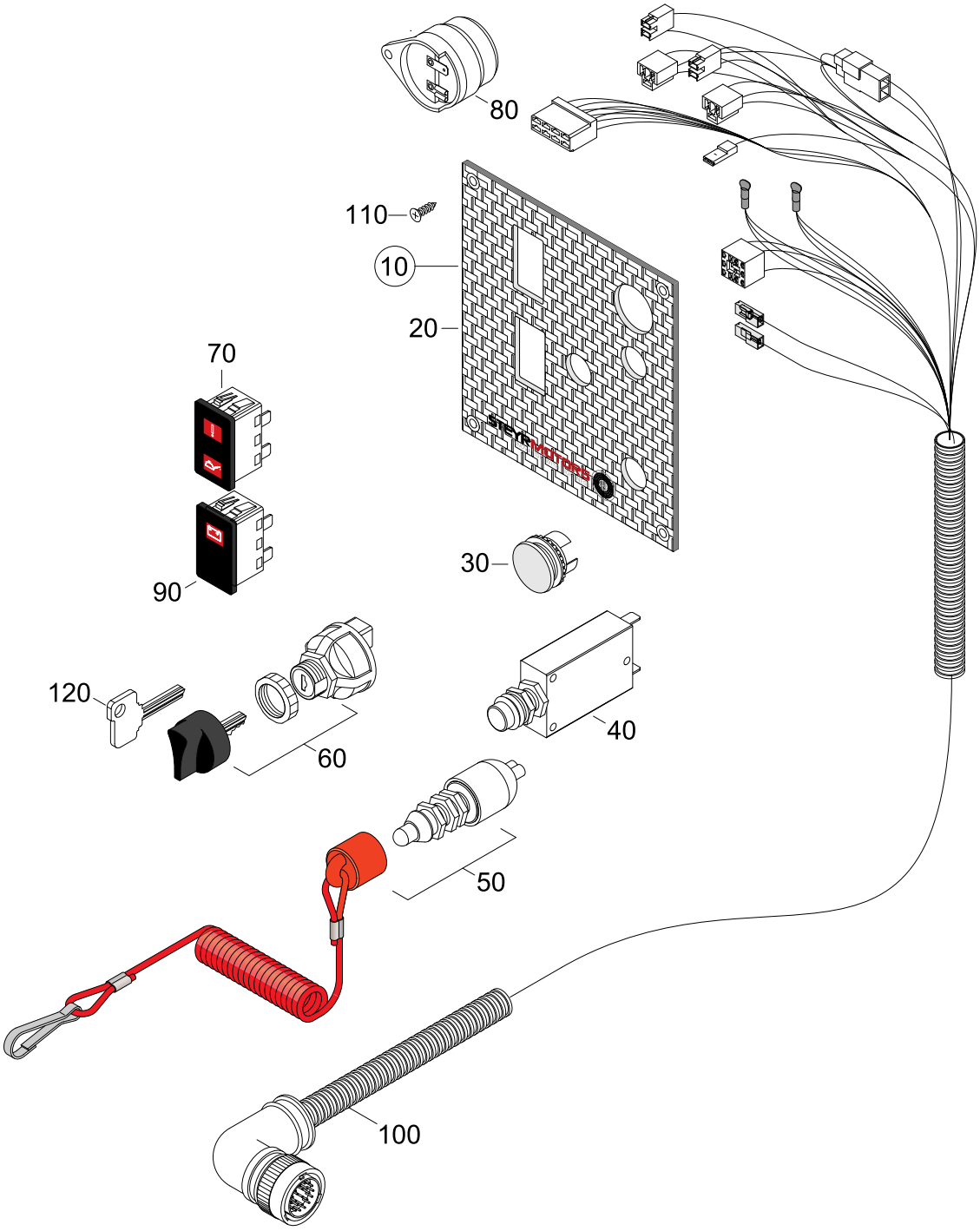

SWITCH PANEL FOR DISPLAY

SE266 S36
MARINE

06112184-1

Pos.	Part.-No.	Qty	Designation	Step
10	2179966-0	1	SWITCH PANEL ASSY. (LED) (SCC)	.1
20	2179983-0	1	FRONT PLATE, SWITCH PANEL	.1
30	2179320-0	1	BLIND PLUG	.1
40	Z002180-0	1	THERMO PROTECTION SWITCH ASSY.	.1
50	2179978-0	1	EMERGENCY CUTOFF SWITCH	.1
60	2179975-0	1	GLOW-START SWITCH	.1
70	Z002196-0	1	WARNING LIGHT, OIL PRESSURE & CHECK ENG.	.1
80	2178760-1	1	HORN AUDIBLE WARNING	.1
90	Z002197-0	1	WARNING LIGHT, BATTERY CHARGE	.1
100	2180076-0	1	CABLE ASSY. SWITCH PANEL	.1
110	9000817-0	4	CR.REC.COUNT.SUNK HD.TPG.SCR. 3.5x16	.1
120	2181496-0	1	IGNITION KEY, BLANK PART	.1

STEYRMOTORS
INNOVATION WITH LIGHTNESS

SE266 S36 MARINE

PUSH BUTTON PANEL SOLAS FOR DISPLAY

06122184-1

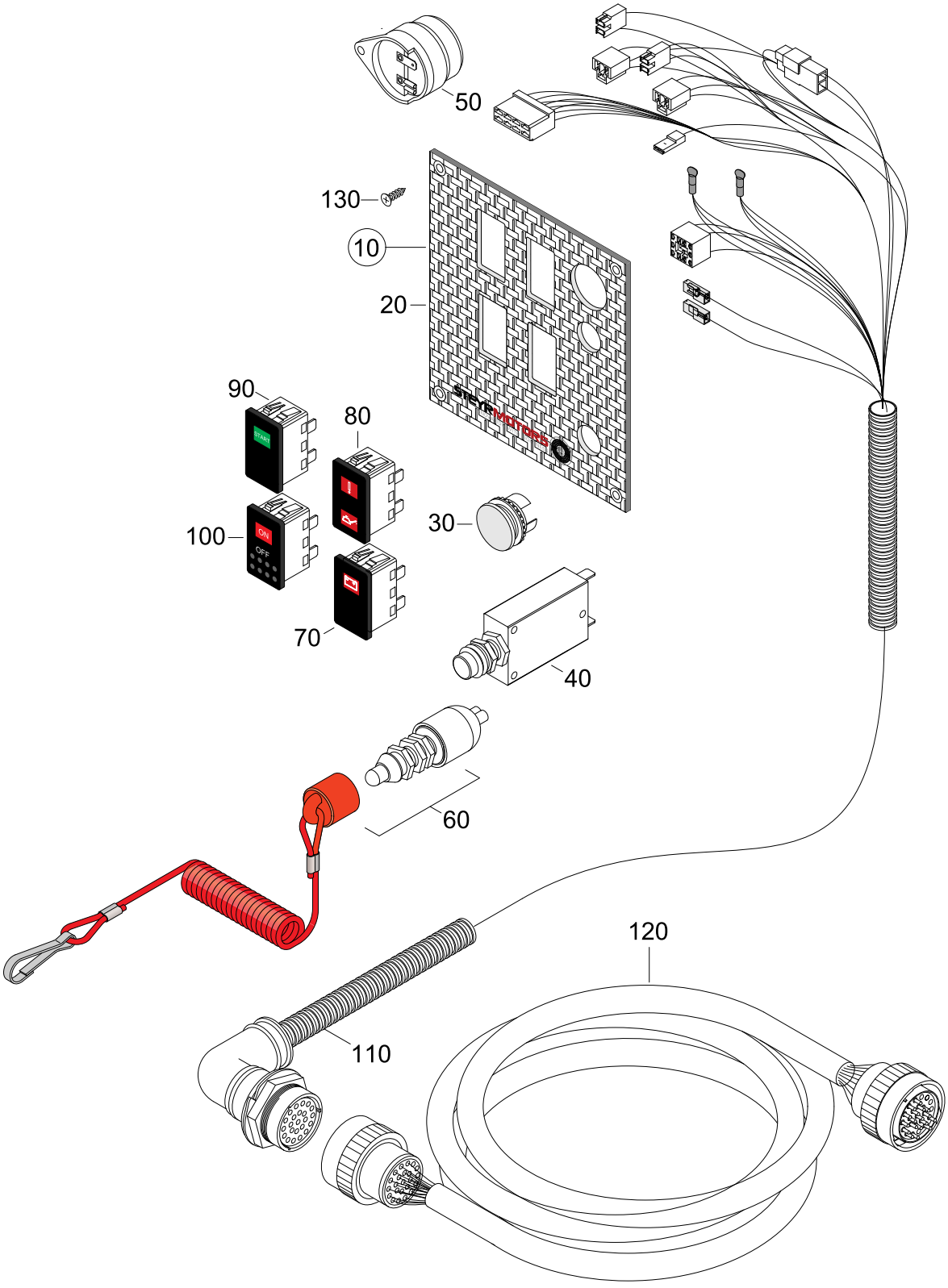

PUSH BUTTON PANEL SOLAS FOR DISPLAY

SE266 S36
MARINE

06122184-1

Pos.	Part.-No.	Qty	Designation	Step
10	2179967-0	1	PUSH BUTTON PANEL (LED) SOLAS (SCC)	.1
20	2179984-0	1	FRONT PLATE, PUSH BUTTON PANEL	..2
30	2179320-0	1	BLIND PLUG	..2
40	Z002180-0	1	THERMO PROTECTION SWITCH ASSY.	..2
50	2178760-1	1	HORN AUDIBLE WARNING	..2
60	2179978-0	1	EMERGENCY CUTOFF SWITCH	..2
70	Z002197-0	1	WARNING LIGHT, BATTERY CHARGE	..2
80	Z002196-0	1	WARNING LIGHT, OIL PRESSURE & CHECK ENG.	..2
90	Z002198-0	1	START SWITCH, GREEN	..2
100	Z002199-0	1	IGNITION SWITCH	..2
110	2180077-0	1	CABLE ASSY.PUSH-BUTTON PANEL	..2
120	2206291-1	1	INTERMEDIATE CABLE 5m	..2
130	9000817-0	4	CR.REC.COUNT.SUNK HD.TPG.SCR. 3.5x16	..2

SE266 S36
MARINE

EXTENSION CABLE INSTRUMENTS

06136184-0

NOTE: NOT COMPATIBLE WITH "SOLAS" INSTRUMENT PANEL

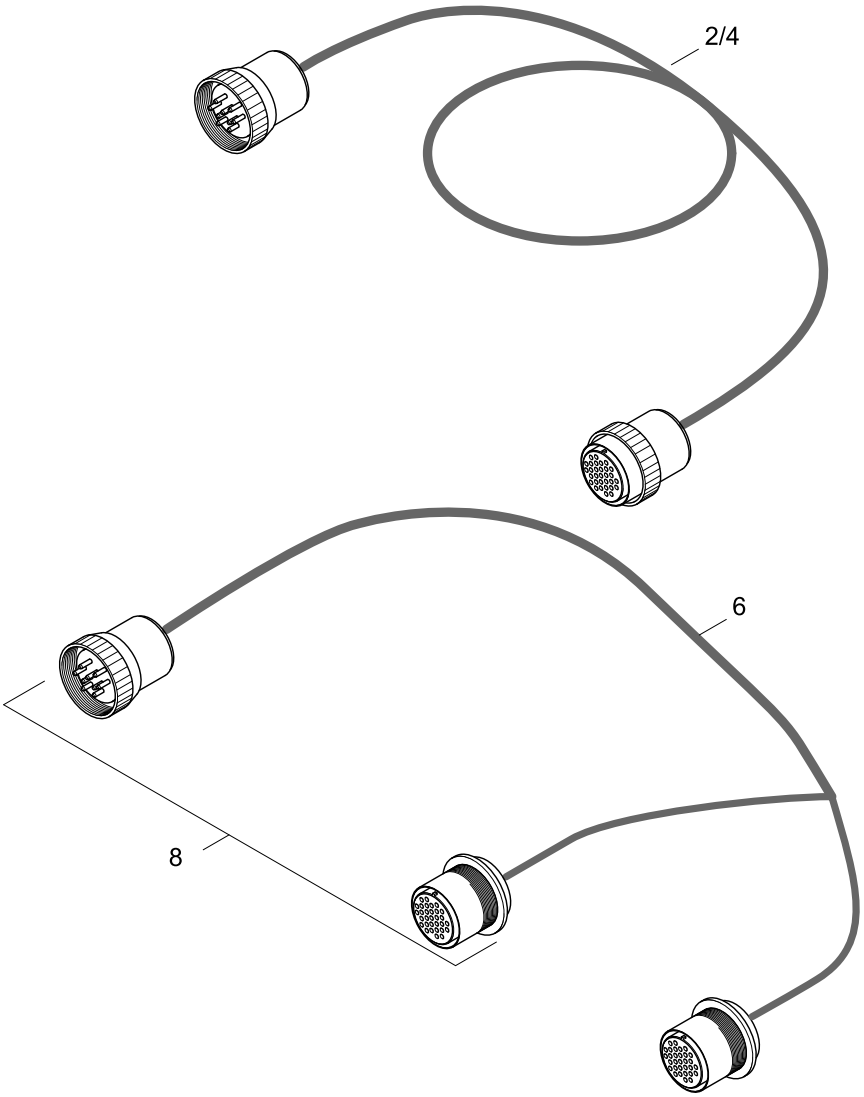

EXTENSION CABLE INSTRUMENTS

SE266 S36 MARINE

06136184-0

Pos.	Part.-No.	Qty	Designation	Step
2	2206291-0	1	EXTENSION CABLE 6,3m 23-WAY CON.	.1
4	2206291-2	1	EXTENSION CABLE 10m	.1
6	2206292-0	1	Y-JUNCTION CABLE 1m 23-WAY CON.	.1
8	Z002410-0	1	CABLE-PLUG PAIR COMPL. 23-POLE	.1

NOTE: **NOT COMPATIBLE WITH "SOLAS" INSTRUMENT PANEL**

07006284-0

ZF 63, 63A, 63 IV, 63 C

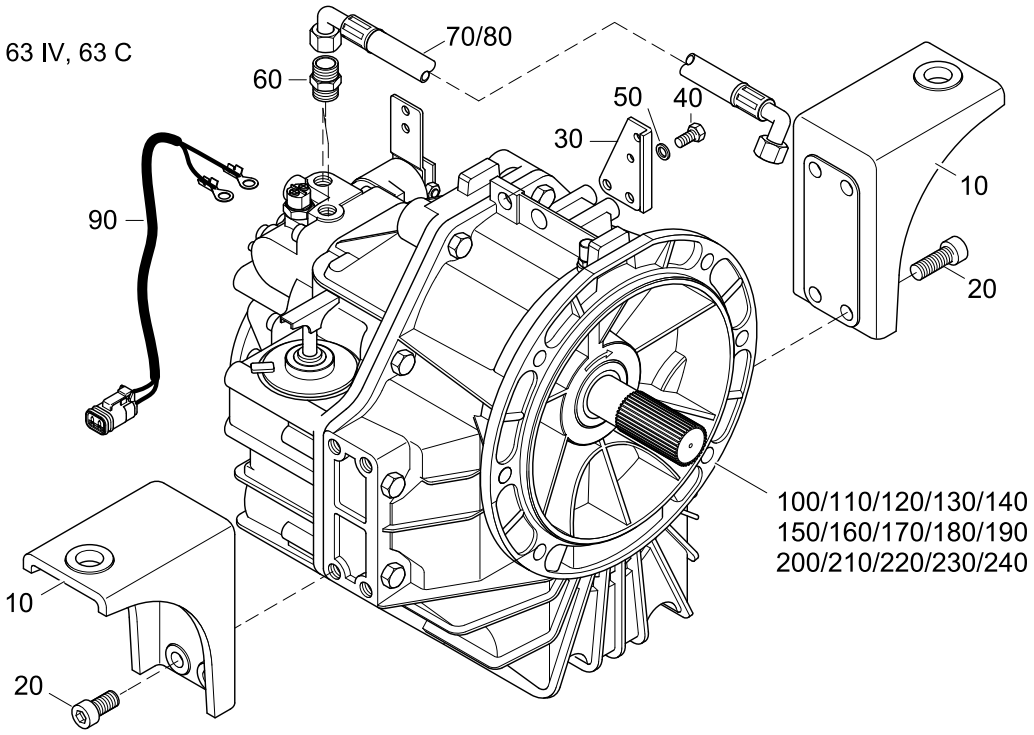

TRANSMISS., MOUNTING BRACKETS, PIPES

SE266 S36 MARINE

07006284-0

Pos.	Part.-No.	Qty	Designation	Step
10	2178710-V	2	BRACKET GEAR-BOX DOWN ANGLE	.1
20	9000081-0	8	HEX.SOCK. SCR. ISO 4762-M12x35-8.8-A3C	.1
30	2178711-9	1	BRACKET SHIFT CABLE PAINTED	.1
40	3800224-0	2	HEX.HD.SCR. ISO 4017-M8x20-A2-70	.1
50	3930103-0	2	WASHER ISO 7089-8-140HV-A2	.1
60	Z011655-0	2	THREADED SOCKET 3/8NPT-M18x1,5	.1
70	2181242-0	1	OIL HOSE L=1000mm	.1
80	2178732-0	1	OIL HOSE L=825mm	.1
90	2180915-0	1	HARNESS GEAR-SWITCH	.1
100	2178651-5	1	GEARBOX ASSY. ZF 63 A I=1.56 (PAINTED)	.1
110	2178651-6	1	GEARBOX ASSY. ZF 63 A I=2.04 (PAINTED)	.1
120	2178651-7	1	GEARBOX ASSY. ZF 63 A I=2.52 (PAINTED)	.1
130	2178651-8	1	GEARBOX ASSY. ZF 63 A I=1.22 (PAINTED)	.1
140	2178651-9	1	GEARBOX ASSY. ZF 63 A I=2.70 (PAINTED)	.1
150	2178766-5	1	GEARBOX ASSY. ZF 63 I=1.51 (PAINTED)	.1
160	2178766-6	1	GEARBOX ASSY. ZF 63 I=2.48 (PAINTED)	.1
170	2178766-7	1	GEARBOX ASSY. ZF 63 I=2.78 (PAINTED)	.1
180	2178766-8	1	GEARBOX ASSY. ZF 63 I=1.93 (PAINTED)	.1
190	2178766-9	1	GEARBOX ASSY. ZF 63 I=1.25 (PAINTED)	.1
200	2178652-6	1	GEARBOX ASSY. ZF 63 IV I=2.00 (PAINTED)	.1
210	2178652-7	1	GEARBOX ASSY. ZF 63 IV I=2.48 (PAINTED)	.1
220	2178652-8	1	GEARBOX ASSY. ZF 63 IV I=1.29 (PAINTED)	.1
230	2178652-5	1	GEARBOX ASSY. ZF 63 IV I=1.56 (PAINTED)	.1
240	2179500-9	1	GEARBOX ASSY. ZF 63 C I=1 (PAINTED)	.1

07016184-0

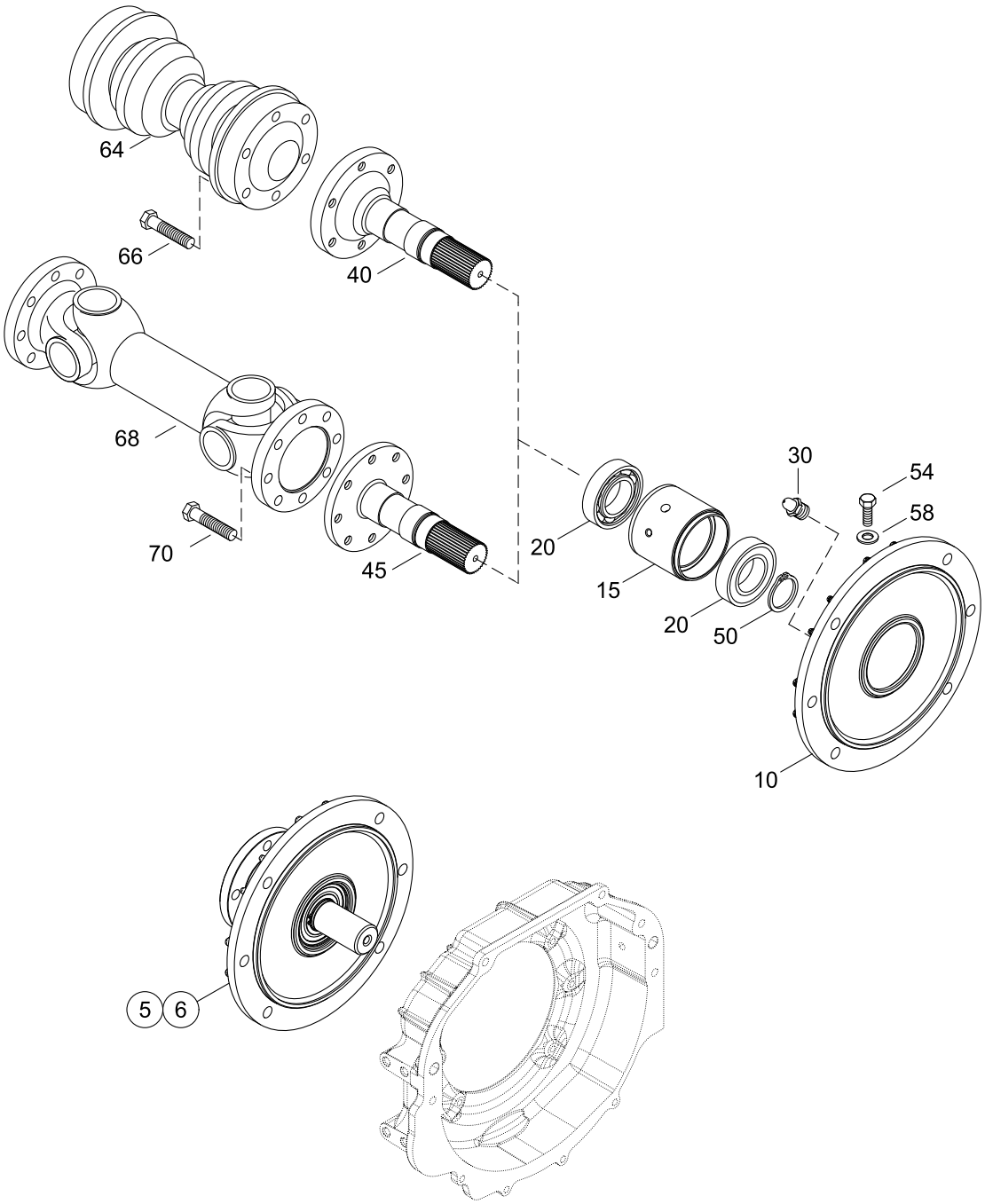

ALU - HOUSING

TRANSMISSION-SHAFT, PTO-SHAFT

SE266 S36 MARINE

07016184-0

Pos.	Part.-No.	Qty	Designation	Step
5	Z002098-0	1	ADAPTER SHAFT ASSY. - 6-HOLES (PAINTED)	.1
6	Z002099-0	1	ADAPTER SHAFT ASSY. - 8-HOLES (PAINTED)	.1
10	2178815-1	1	ADAPTER HOUSING JET (ALU CASTING)	..2
15	2179328-0	1	BEARING RETAINER	..2
20	3311181-0	2	DEEP GROOVE BALL BEARING DIN 625-RS1	..2
30	3963112-0	1	LUBRICATING NIPPLE DIN 71412-AM8x1-A3F	..2
40	2178814-0	1	ADAPTER SHAFT ENGINE-PROP. (6-HOLES)	..2
45	2178814-1	1	ADAPTER SHAFT ENGINE-PROP. (8-HOLES)	..2
50	3933251-0	1	RETAINING RING SHAFT DIN 471-35x1,5	..2
54	3802442-0	2	HEX.HD.SCR. ISO 4017-M8x40-8.8-A2C	..2
58	O125134-0	2	WASHER LARGE	..2
64	2178836-1	1	PROPELLER SHAFT SHORT L=210 +/-24mm	.1
66	9000198-0	6	HEX.HD.BOLT ISO 4014-M12x65-8.8-A3C	.1
68	2178836-0	1	SLIDING SHAFT LONG L=354mm +70	.1
70	3802515-0	8	HEX.HD.SCR. ISO 4017-M10x20-8.8-A3C	.1

STEYRMOTORS
INNOVATION WITH LIGHTNESS

SE266 S36 MARINE

DRIVE ADAPTOR VOLVO STERNDRIVE

07206084-0

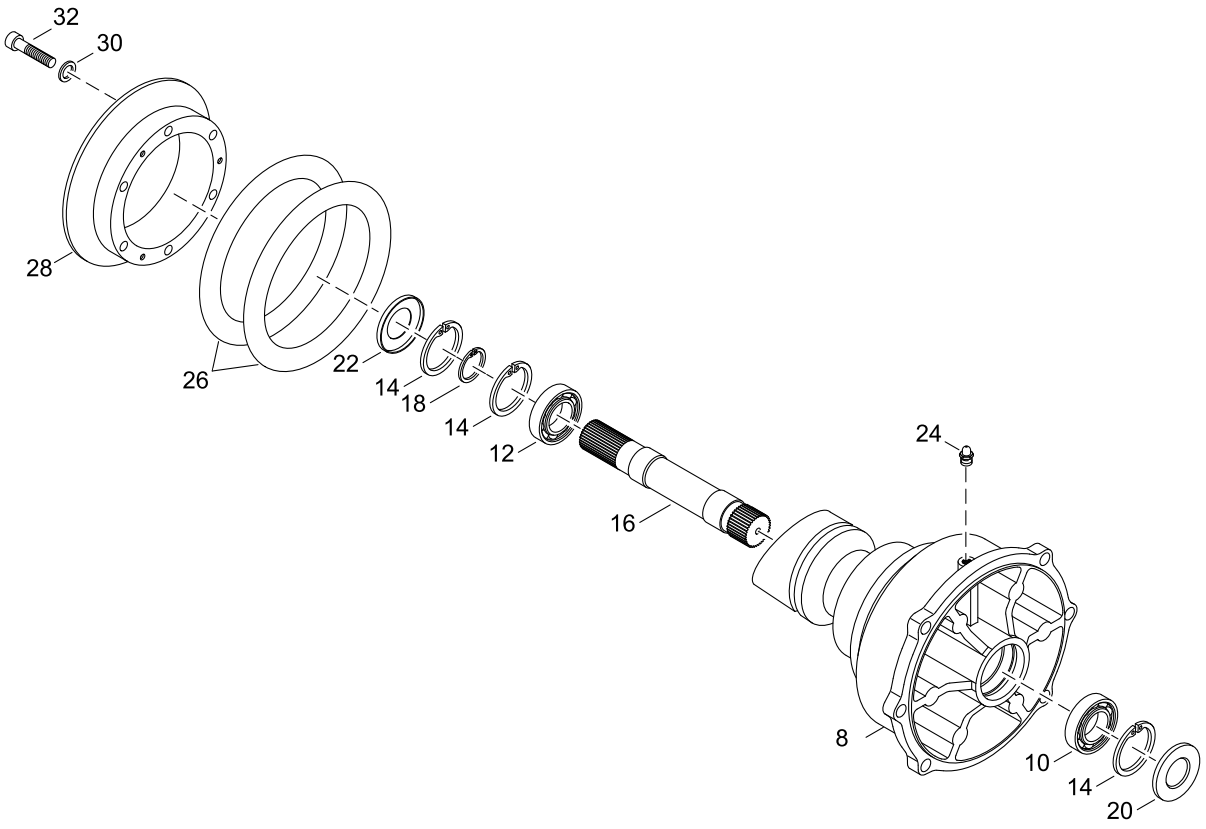

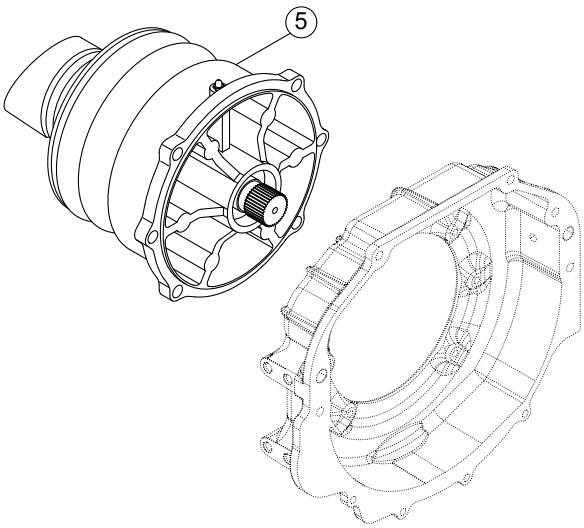

DRIVE ADAPTOR VOLVO STERNDRIVE

SE266 S36
MARINE

07206084-0

Pos.	Part.-No.	Qty	Designation	Step
5	2178819-0	1	ADAPTER VOLVO STERN DRIVE (PAINTED)	.1
8	2178817-0	1	ADAPTERHSG. VOLVO STERN DRIVE	..2
10	9000152-0	1	DEEP GROOVE BALL BEARING DIN 625-6007	..2
12	3311018-0	1	DEEP GROOVE BALL BEARING DIN 625-6206	..2
14	3934310-0	3	CIRCLIP DIN 472-62x2	..2
16	2178818-0	1	ADAPTER SHAFT VOLVO STERN DRIV E	..2
18	3933200-0	1	EXTERIOR CIRCLIP DIN 471-30x1.5	..2
20	9000153-0	1	RADIAL SEALING RING DIN 3760-35x62x7-AS	..2
22	9000153-1	1	RADIAL SEALING RING DIN 3760-35x62x7-A	..2
24	3963124-0	1	LUBRICATING NIPPLE DIN 71412-AM10x1-A3F	..2
26	2178821-0	2	O-RING 155 X 22	..2
28	2178820-0	1	FLANGE VOLVO STERN-DRIVE	..2
30	3930075-0	6	WASHER ISO 7089-10-140HV-A2	..2
32	9000185-1	6	HEX.SOCK. SCR. ISO 4762-M10x100-A2-70	..2

STEYRMOTORS
INNOVATION WITH LIGHTNESS

SE266 S36 MARINE

DRIVE SHAFT EXT. MERCURY STERNDRIVE

07306184-0

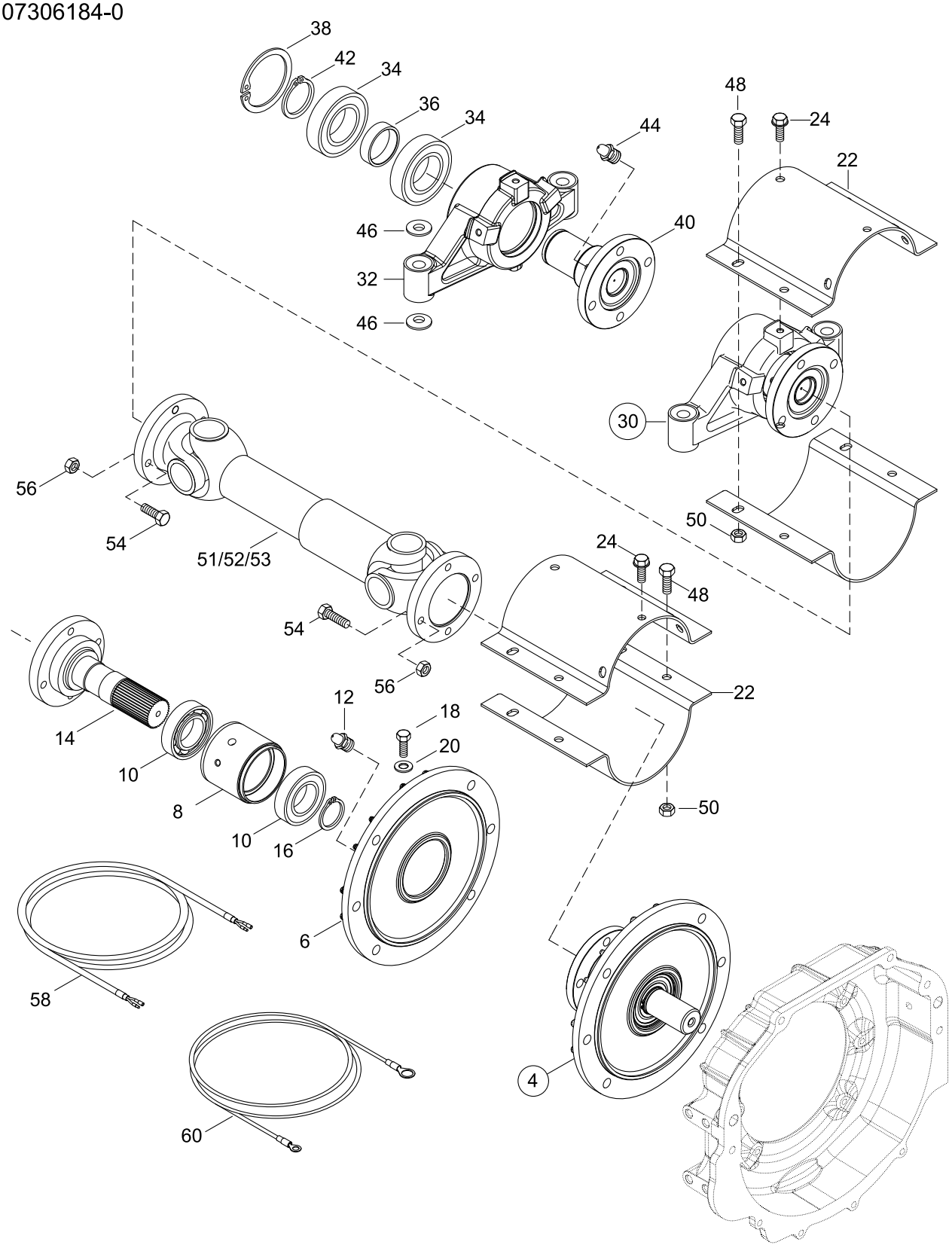

DRIVE SHAFT EXT. MERCURY STERNDRIVE

SE266 S36 MARINE

07306184-0

Pos.	Part.-No.	Qty	Designation	Step
4	Z002116-0	1	ADAPTER SHAFT ASSY. - MERCURY (PAINTED)	.1
6	Z002117-0	1	ADAPTER HOUSING - PAINTED (ALU CASTING)	..2
8	2179328-0	1	BEARING RETAINER	..2
10	3311181-0	2	DEEP GROOVE BALL BEARING DIN 625-RS1	..2
12	3963112-0	1	LUBRICATING NIPPLE DIN 71412-AM8x1-A3F	..2
14	2178814-2	1	ADAPTER SHAFT (MERCURY)	..2
16	3933251-0	1	RETAINING RING SHAFT DIN 471-35x1,5	..2
18	3802442-0	2	HEX.HD.SCR. ISO 4017-M8x40-8.8-A2C	..2
20	O125134-0	2	WASHER LARGE	..2
22	2179273-0	4	COVER PLATE	.1
24	9000305-0	6	HEX.FLANGE BOLT EN 1665-M8x20-10.9-DAC	.1
30	Z002118-0	1	BEARING BLOCK DRIVE SH. MERC. (PAINTED)	.1
32	Z002119-0	1	BEARING BLOCK DRIVE SH. MERC. (PAINTED)	..2
34	9000486-0	2	DEEP GROOVE BALL BEARING DIN 625-6209	..2
36	2179271-0	1	DISTANCE PLATE	..2
38	9000403-0	1	RETAINING RING BORE DIN 472-85x3	..2
40	Z002120-0	1	SHAFT-FLANGE DRIVE SHAFT MERC.	..2
42	3933350-0	1	RETAINING RING SHAFT DIN 471-45x1.75-BL	..2
44	3963112-0	1	LUBRICATING NIPPLE DIN 71412-AM8x1-A3F	..2
46	2179274-0	4	WASHER SPHERIC	.1
48	3802515-0	8	HEX.HD.SCR. ISO 4017-M10x20-8.8-A3C	.1
50	9000052-0	8	HEX.FLANGE NUT DIN 6927-M10-8-DAC	.1
51	Z002079-0	1	DRIVE SHAFT L=432mm & SCREWS	.1
52	Z002080-0	1	DRIVE SHAFT L=1000mm & SCREWS	.1
53	Z002081-0	1	DRIVE SHAFT L=1500mm & SCREWS	.1
54	9000066-0	8	HEX.HD.BOLT ISO 4017-M10x35-12.9	..2
56	9000052-0	8	HEX.FLANGE NUT DIN 6927-M10-8-DAC	..2
58	2179352-0	1	EXTENSION CABLE - TRIMSENSOR 1,5m	.1
60	2179353-0	1	GROUND WIRE FLYW.HSG-TRANSOM 1,8m	.1

SE266 S36 MARINE

HYDRAULIC PUMP

14086284-0

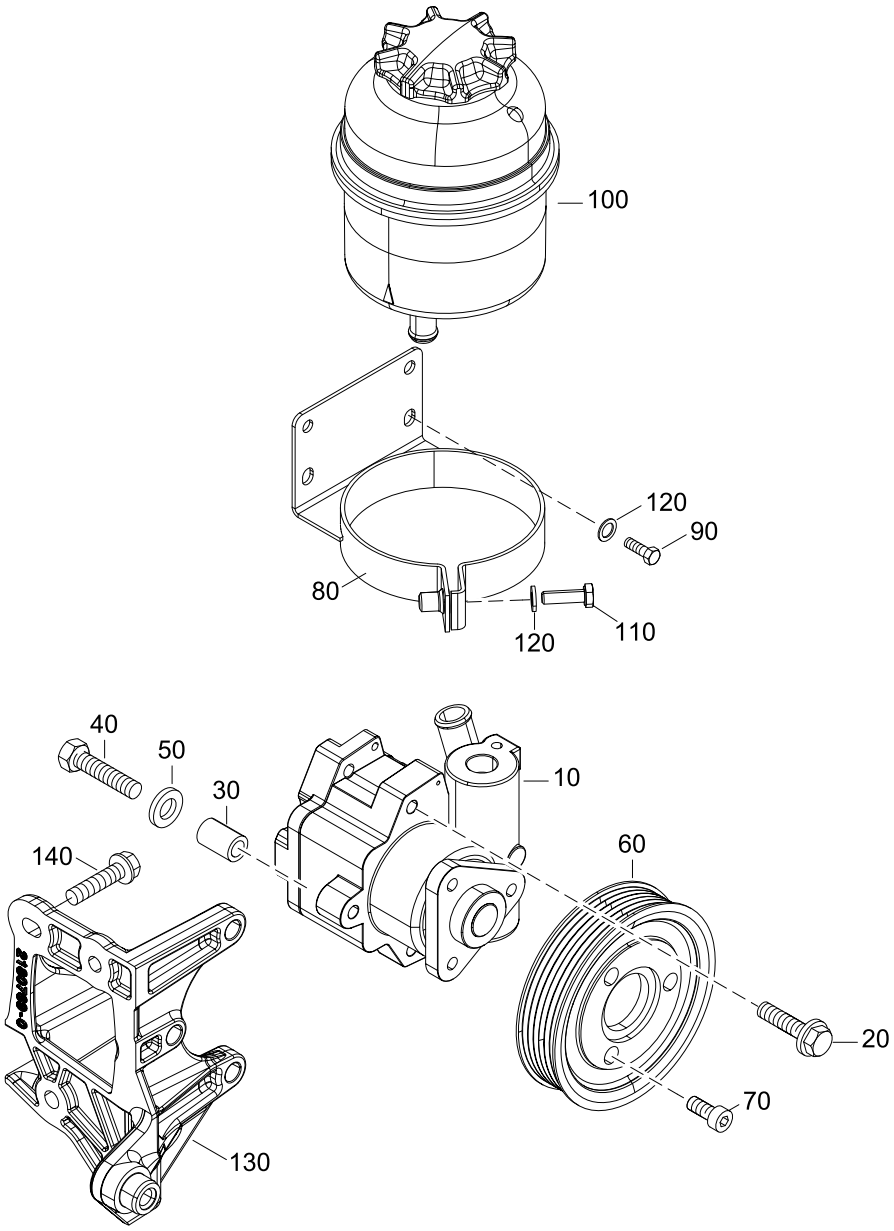

HYDRAULIC PUMP

SE266 S36 MARINE

14086284-0

Pos.	Part.-No.	Qty	Designation	Step
10	2203712-9	1	POWER STEERING PUMP (PAINTED)	.1
20	9000271-0	4	HEX.FLANGE BOLT EN 1665-M8x25-10.9-DAC	.1
30	2203750-0	1	CLAMPING SLEEVE PWR.STRG.PUMP	.1
40	3802447-0	1	HEX.HD.SCR. ISO 4017-M8x45-8.8-A2C	.1
50	3930103-0	1	WASHER ISO 7089-8-140HV-A2	.1
60	2203743-0	1	PULLEY PWR.STRG.PUMP POLY-V	.1
70	3860152-0	3	HEX.SOCK. SCR. ISO 4762-M8x16-A2-70	.1
80	700807	1	BRACKET, RESERVOIR POWER STEERING PUMP	.1
90	3800238-0	4	HEX.HD.SCR. ISO 4017-M6x12-A2-70	.1
100	2178869-1	1	OILTANK POWER STEERING PUMP	.1
110	3800221-0	1	HEX.HD.SCR. ISO 4017-M6x20-A2-70	.1
120	3930070-0	5	WASHER ISO 7089-6-140HV-A2	.1
130	Z026134-0	1	BRACKET HYDRAULIC PUMP (PAINTED)	.1
140	9000431-0	3	HEX.FLANGE BOLT EN 1665-M8x30-10.9-DAC	.1

STEYRMOTORS
INNOVATION WITH LIGHTNESS

SE266 S36
MARINE

HYDRAULIC PIPES

14096284-0

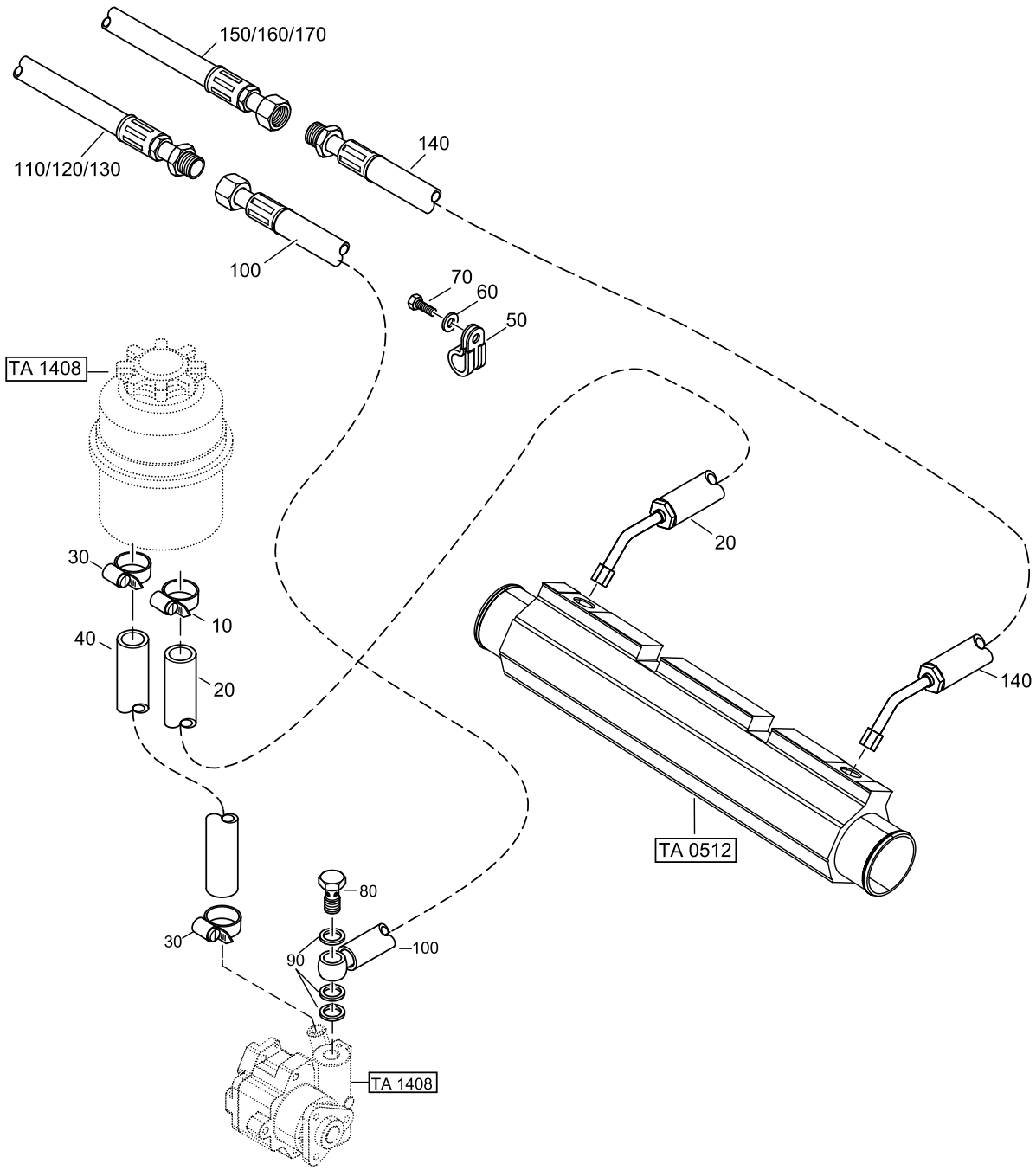

HYDRAULIC PIPES

SE266 S36 MARINE

14096284-0

Pos.	Part.-No.	Qty	Designation	Step
10	2178655-0	1	HOSE CLAMP 12-20/9	.1
20	2178936-0	1	HOSE, COOLER-RESERVOIR	.1
30	2177753-0	2	HOSE CLAMP 16-25/9	.1
40	2178573-9	1	HOSE, RESERVOIR HYDR. PUMP	.1
50	O910201-0	1	CLAMP POWER STEERING PUMP HOSES	.1
60	3930103-0	1	WASHER ISO 7089-8-140HV-A2	.1
70	3800224-0	1	HEX.HD.SCR. ISO 4017-M8x20-A2-70	.1
80	2180201-0	1	HOLLOW SCREW M16x1,5 RW	.1
90	3098016-0	2	SEALING RING DIN 7603-A16x20-CU	.1
100	2178905-0	1	HOSE, PUMP-CYLINDER	.1
110	2178905-M	1	HOSE, PUMP-CYL. BRAVO STERN DR. (SCREWED	.1
120	2178905-S	1	HOSE, PUMP->CYL. BRAVO STERN DR.	.1
130	2178905-A	1	HOSE PUMP-CYL. ALPHA&K.COBRA STERN DRIVE	.1
140	2178906-0	1	HOSE, CYLINDER-OIL COOLER	.1
150	2178906-M	1	HOSE BRAVO STERN DR.-OIL COOLER (SCREWED	.1
160	2178906-S	1	HOSE, ZYL. BRAVO STERNDR.—>OIL COOLER	.1
170	2178906-A	1	HOSE CYL. ALPHA&K.COBRA ST.DRIVE -COOLER	.1

22076284-0

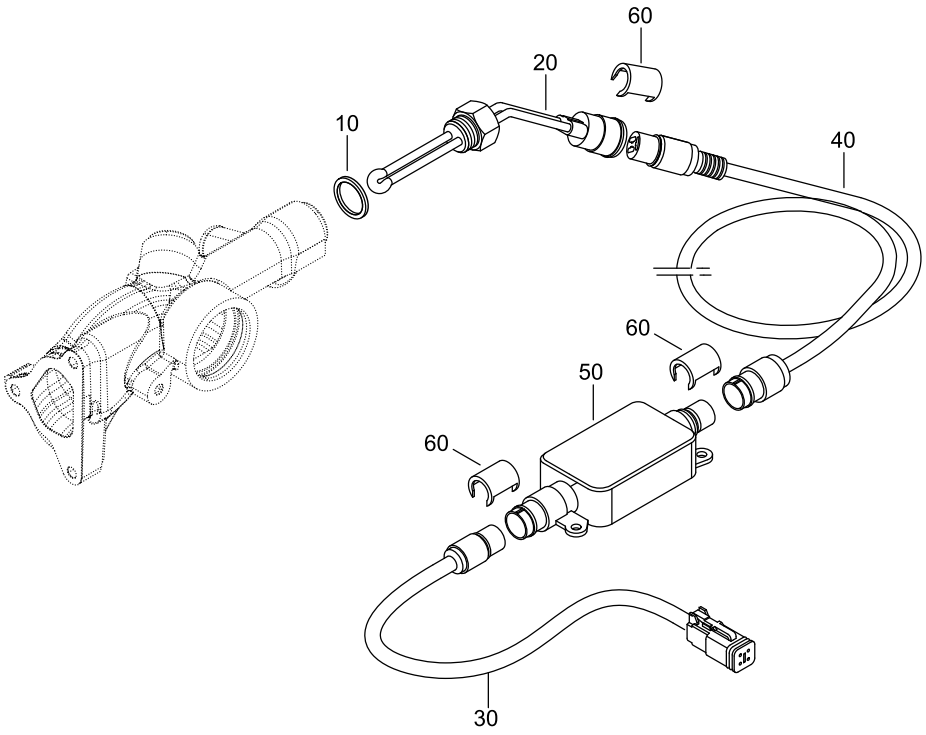

ENGINE PREHEATING

SE266 S36 MARINE

22076284-0

Pos.	Part.-No.	Qty	Designation	Step
10	3098026-0	1	SEALING RING DIN 7603-A22x27-CU	.1
20	2180393-0	1	BLOCK HEATING DEVICE 42V - 300W	.1
30	2180396-0	1	CABLE ENGINE PREHEATING DEVICE 0,5m	.1
40	2206318-0	1	CABLE ENGINE PREHEATING DEVICE, 2m	.1
50	2180395-0	1	THERMO SWITCH	.1
60	2180695-0	3	SAFETY LOCK	.1

SE266 S36
MARINE

INTEGR. FLYWHEELGENERATOR (IFG) (RAW WATER COOLING)

40006284-0

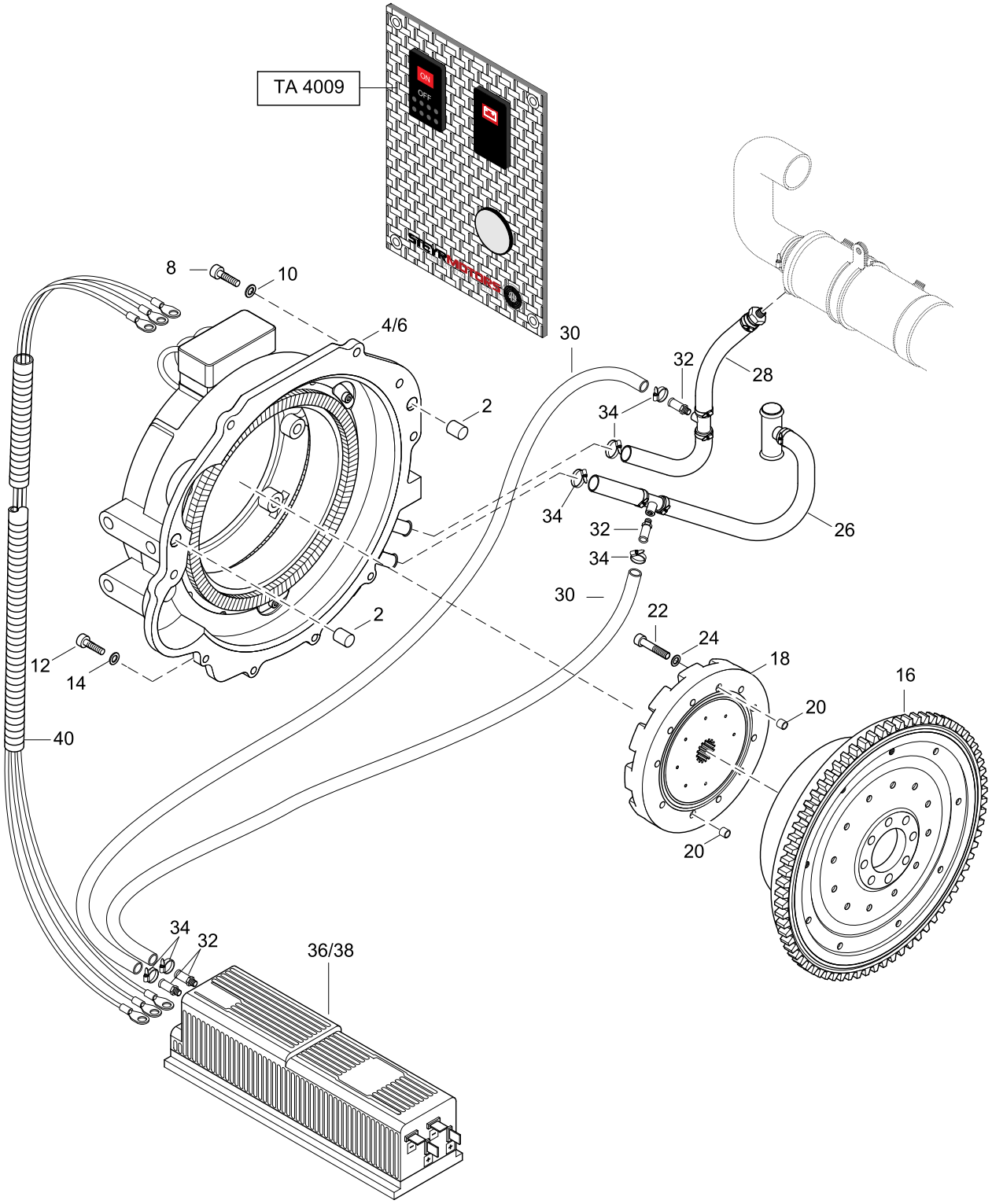

INTEGR. FLYWHEELGENERATOR (IFG) (RAW WATER COOLING)

SE266 S36 MARINE

40006284-0

Pos.	Part.-No.	Qty	Designation	Step
2	9000490-0	2	PARALLEL PIN 16m6x22-ST	.1
4	Z002104-0	1	S.P.FLYWHEEL HSG. IFG 24V ASSY (PAINTED)	.1
6	Z002105-0	1	S.P.FLYWHEEL HSG. IFG 12V ASSY (PAINTED)	.1
8	3862545-0	5	HEX.SOCK. SCR. ISO 4762-M10x35-A2-70	.1
10	3930075-0	5	WASHER ISO 7089-10-140HV-A2	.1
12	3862433-0	4	HEX.SOCK. SCR. ISO 4762-M8x30-A2-70	.1
14	3930103-0	4	WASHER ISO 7089-8-140HV-A2	.1
16	Z026155-0	1	FLYWHEEL 6 CYL. IFG ASSY. (BALANCED)	.1
18	Z002106-0	1	S.P. COUPLER	.1
20	2203543-0	2	FITTING SLEEVE	.1
22	9000473-0	12	HEX.SOCK. SCR. ISO 4762-M8x100-12.9-GEO	.1
24	3930103-0	12	WASHER ISO 7089-8-140HV-A2	.1
26	Z002107-0	1	COOLING WATER HOSE ASSY. „IFG“ (RETUR	.1
28	Z002108-0	1	COOLING WATER HOSE ASSY. „IFG“ (SUPPL	.1
30	2179300-3	2	COOLANT HOSE DI=13 / L=2000	.1
32	2180149-0	4	HOSE NOZZLES W. THREAD	.1
34	2178655-0	12	HOSE CLAMP 12-20/9	.1
36	Z002110-0	1	ELECTR.CONTROL SYSTEM IFG 24V	.1
38	Z002111-0	1	ELECTR.CONTROL SYSTEM IFG 12V	.1
40	Z002112-0	1	KIT CONNECTING CABLE IFG	.1

SE266 S36
MARINE

IFG DUAL CIRCUIT COOLING

40006284-1

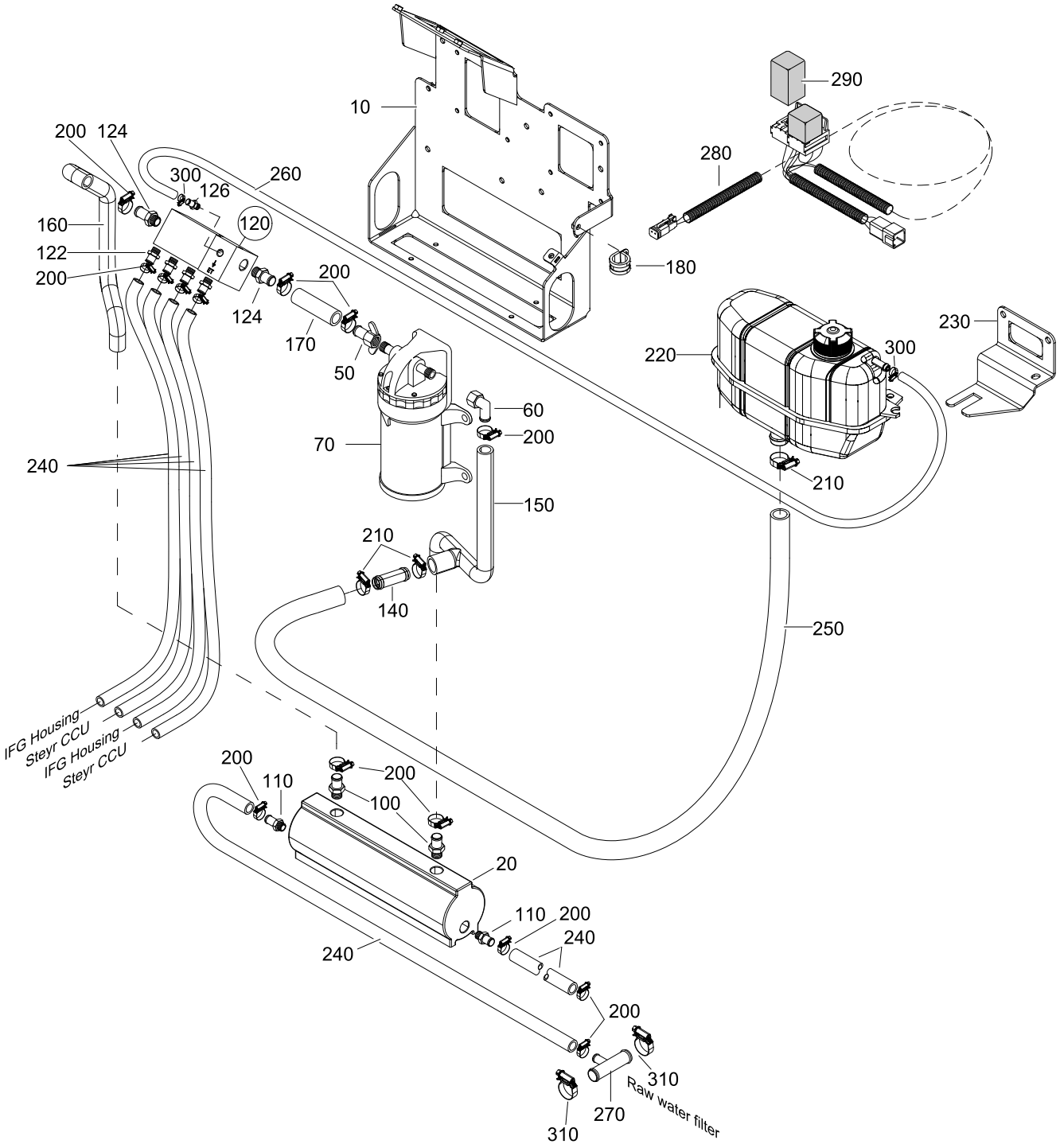

IFG DUAL CIRCUIT COOLING

SE266 S36 MARINE

40006284-1

Pos.	Part.-No.	Qty	Designation	Step
10	2181082-0	1	BRACKET, DUAL CIRCUIT COOLING EXTERN	.1
20	2180164-0	1	WATER COOLER	.1
50	2181084-0	1	STRAIGHT SWIVEL FITT. 1/2 BARB-1/2 NPTF	.1
60	2181086-0	1	ELBOW SWIVEL FITTING 5/8 BARB - 1/2 NPTF	.1
70	500071	1	IMPELLER PUMP ASSY.	.1
100	2180219-1	2	SCREW-IN SOCKET 1/2-13	.1
110	2180219-0	2	SCREW-IN SOCKET 1/2-13	.1
120	500072	1	CONNECTION BLOCK ASSY.	.1
122	2180148-0	4	SCREW-IN SOCKET 3/8-13	..2
124	2180148-1	2	SCREW-IN SOCKET 3/8-16	..2
126	2200947-0	1	HOSE NIPPLE	..2
140	2181078-0	1	PIPE	.1
150	2181079-0	1	MOLDED HOSE	.1
160	2181080-0	1	MOULDED HOSE, COOLING WATER	.1
170	2181081-0	1	HOSE 16x52,5	.1
180	9000879-0	2	PIPE CLAMP RSGU1.22/15-W5	.1
200	2177753-0	14	HOSE CLAMP 16-25/9	.1
210	2177464-0	3	CLAMP 20-32/12	.1
220	2180378-0	1	EXPANSION TANK	.1
230	2180383-0	1	BRACKET EXPANSION TANK	.1
240	2179300-3	6	COOLANT HOSE DI=13 / L=2000	.1
250	2180634-0	1	HOSE COOLANT 20x2000	.1
260	2174679-1	1	COOLANT HOSE	.1
270	2040095-1	1	PIPE ENGINE-COOLANT 32/13	.1
280	2180581-0	1	HARNESS ASSY. IFG DUAL CIRCUIT COOLING	.1
290	2180596-0	1	PROGRAMMED RELAIS	.1
300	2174405-0	2	HOSE CLAMP 10-16/7,5	.1
310	2174406-0	2	HOSE CLAMP 25-40/9	.1

SE266 S36
MARINE

PUSH BUTTON PANEL „IFG“

40096184-1

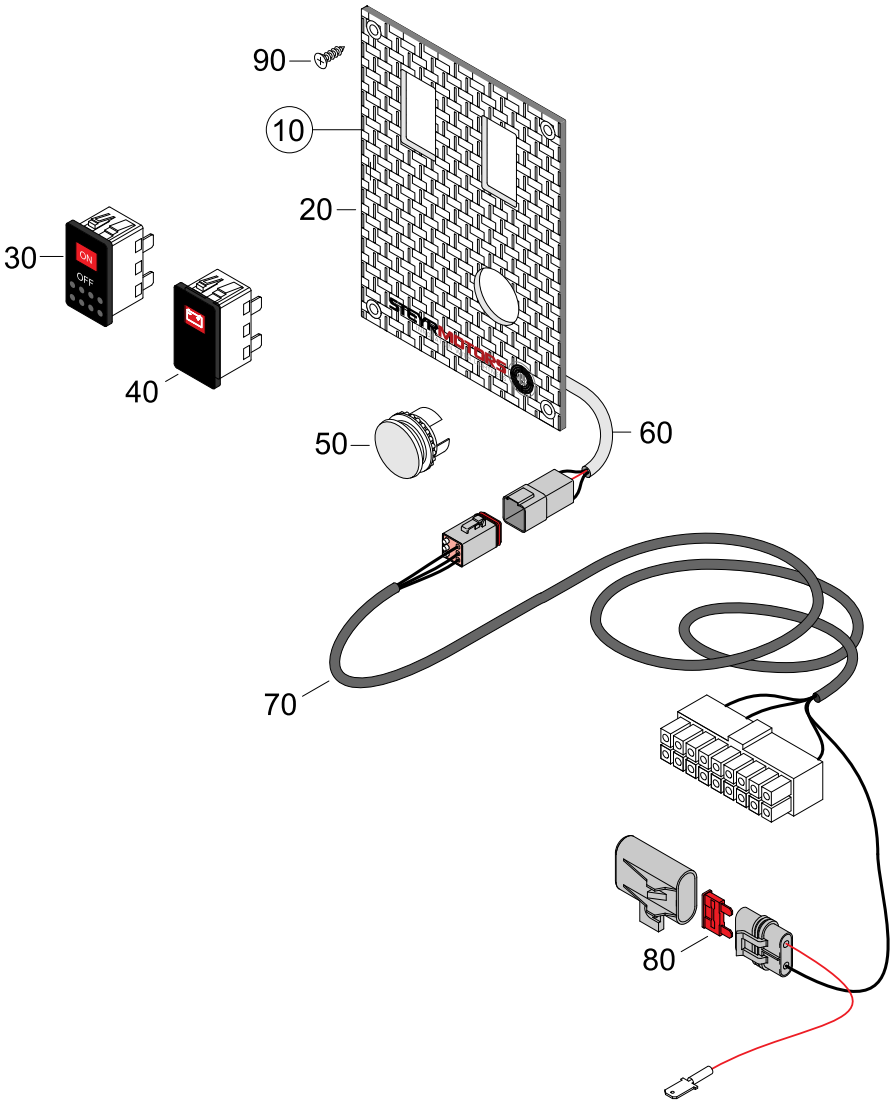

PUSH BUTTON PANEL „IFG“

SE266 S36 MARINE

40096184-1

Pos.	Part.-No.	Qty	Designation	Step
10	2179968-0	1	PUSH BUTTON PANEL IFG (LED)	.1
20	2180092-0	1	INSTRUMENT PANEL IFG	..2
30	Z002199-0	1	IGNITION SWITCH	..2
40	Z002197-0	1	WARNING LIGHT, BATTERY CHARGE	..2
50	2179320-0	1	BLIND PLUG	..2
60	2206298-0	1	WIRING HARNESS ASSY. IFG-PANEL	..2
70	2206299-0	1	CONNE. CABLE AY. 8m IFG-PANEL	..2
80	11345	1	BLADE FUSE 10A	..2
90	9000817-0	4	CR.REC.COUNT.SUNK HD.TPG.SCR. 3.5x16	..2

SE266 S36 MARINE

HYBRID STAGE I

41006284-0

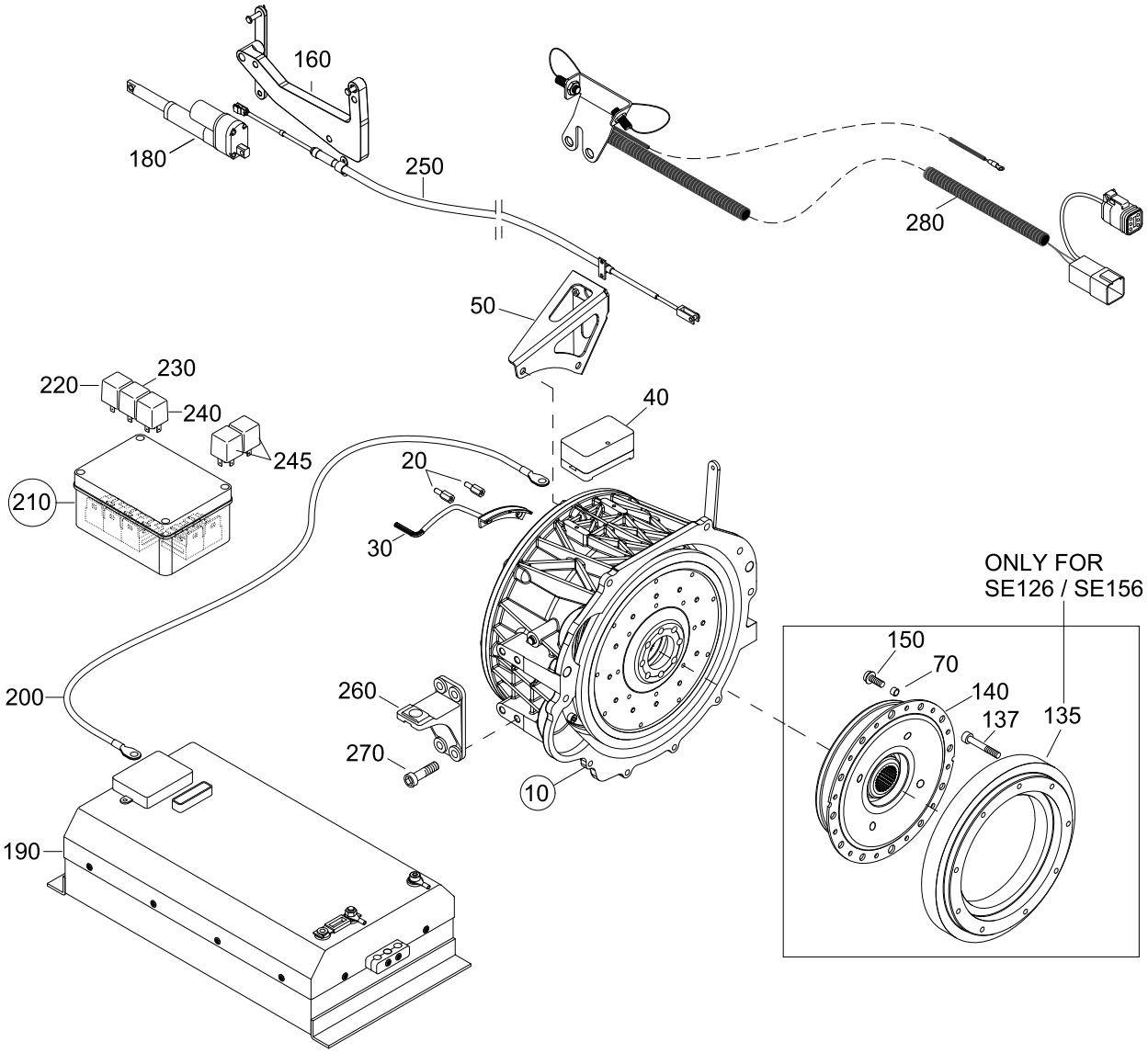

HYBRID STAGE I

SE266 S36 MARINE

41006284-0

Pos.	Part.-No.	Qty	Designation	Step
10	Z002171-0	1	ELECTRIC MOTOR ASSY.	.1
20	2179623-1	2	DISTANCE BOLT	..2
30	Z002173-0	1	HALL SENSOR ASSY.	..2
40	2179758-0	1	CONNECTION PLATE	..2
50	2180122-0	1	GEAR SHIFT BRACKET	..2
70	2203543-0	2	FITTING SLEEVE	.1
135	2180522-0	1	FLYWHEEL MASS	.1
137	3862452-0	9	HEX.SOCK. SCR. ISO 4762-M8x50-8.8-A2C	.1
140	Z026060-0	1	S.P. COUPLER	.1
150	9000685-0	12	LOCKING SCREW-M8x16-10.9	.1
160	2179739-1	1	CONTROL BRACKET ASSY.	.1
180	Z002174-0	1	CONTROL MOTOR, CLUTCH	.1
190	Z002195-0	1	ELECTR.CONTROL SYSTEM	.1
200	Z021009-0	3	CONNECTING CABLE	.1
210	Z002175-0	1	RELAISBOX ASSY.	.1
220	2179961-0	1	PROGRAMMED RELAIS, A12	..2
230	2179960-0	1	PROGRAMMED RELAIS, A11	..2
240	2179959-0	1	PROGRAMMED RELAIS, A10	..2
245	9000183-0	2	RELAY 12V 40A	..2
250	Z002178-0	1	GEAR SHIFT CABLE ASSY.	.1
260	2178722-1	2	BRACKET FLYWHEEL HOUSING	.1
270	9000081-0	8	HEX.SOCK. SCR. ISO 4762-M12x35-8.8-A3C	.1
280	Z026154-0	1	POSITION SENSORS ASSY. (SPARE PART)	.1

52006284-0

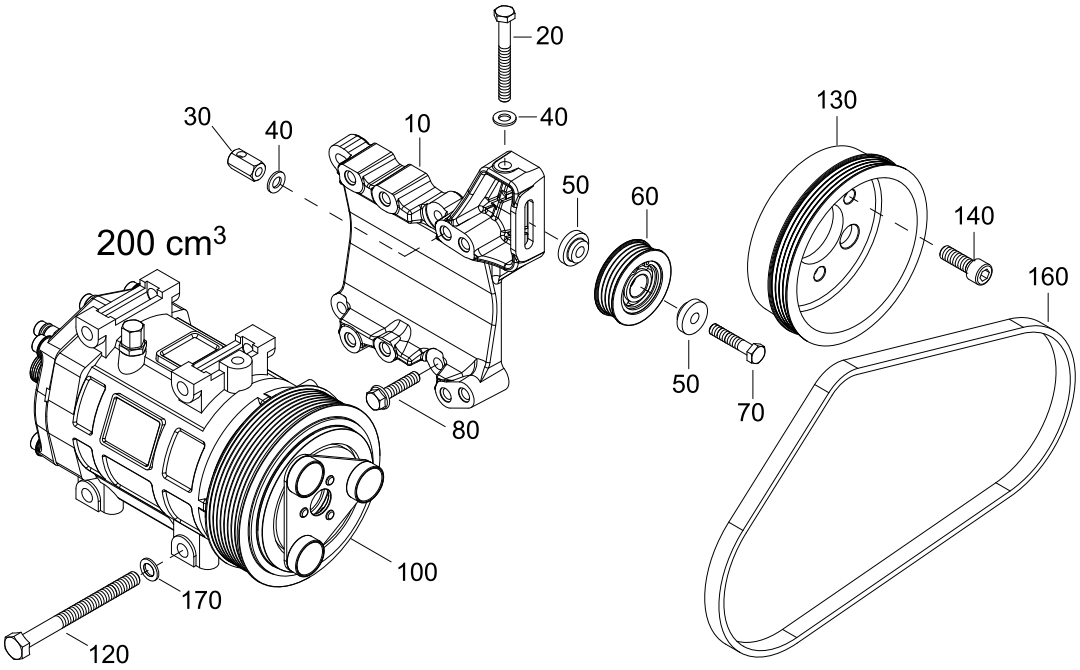
20
30
40
10
40
130
50
60
140
200 cm3
160
50
70
80
100
170
120

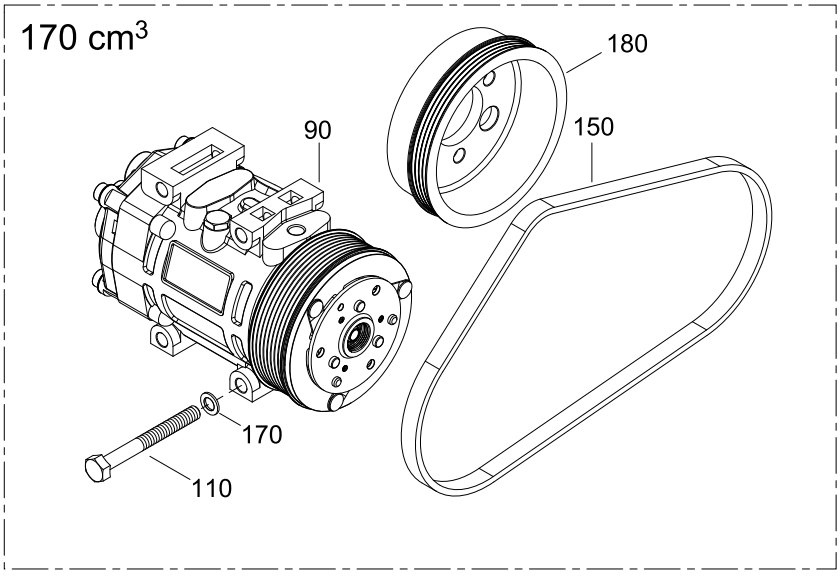
170 cm3
180
90
150
170
110

AIR CONDITIONING & DRIVE

SE266 S36 MARINE

52006284-0

Pos.	Part.-No.	Qty	Designation	Step
10	Z026144-0	1	BRACKET, A-C COMPRESSOR (PAINTED)	.1
20	9001262-0	1	HEX.HD.SCR. ISO 4017-M8x70-A2-70	.1
30	2181165-0	1	NUT TENSIONER	.1
40	3930103-0	2	WASHER ISO 7089-8-140HV-A2	.1
50	2179067-0	2	CENTERING SLEEVE	.1
60	2181164-0	1	IDLER PULLEY DM55 ASSY.	.1
70	3800307-0	1	HEX.HD.SCR. ISO 4017-M8x35-8.8-A3C	.1
80	9000278-0	4	HEX.FLANGE BOLT EN 1665-M8x35-8.8-A2C	.1
90	Z026145-0	1	A-C COMPRESSOR 170cm³ (PAINTED)	.1
100	Z026146-0	1	A-C COMPRESSOR 200cm³ (PAINTED)	.1
110	9001153-0	4	HEX.HD.BOLT ISO 4014-M10x90-A2-70	.1
120	9001152-0	4	HEX.HD.BOLT ISO 4014-M10x100-A2-70	.1
130	2180834-0	1	PULLEY	.1
140	9000601-0	3	HEX.SOCK. SCR. ISO 4762-M10x30-12.9	.1
150	2181176-0	1	POLY-V BELT L=820 4PK	.1
160	2181175-0	1	POLY-V BELT L=875 4PK	.1
170	3930075-0	4	WASHER ISO 7089-10-140HV-A2	.1
180	2180835-0	1	PULLEY	.1

SE266 S36 MARINE

OIL DRAIN PUMP

55206284-0

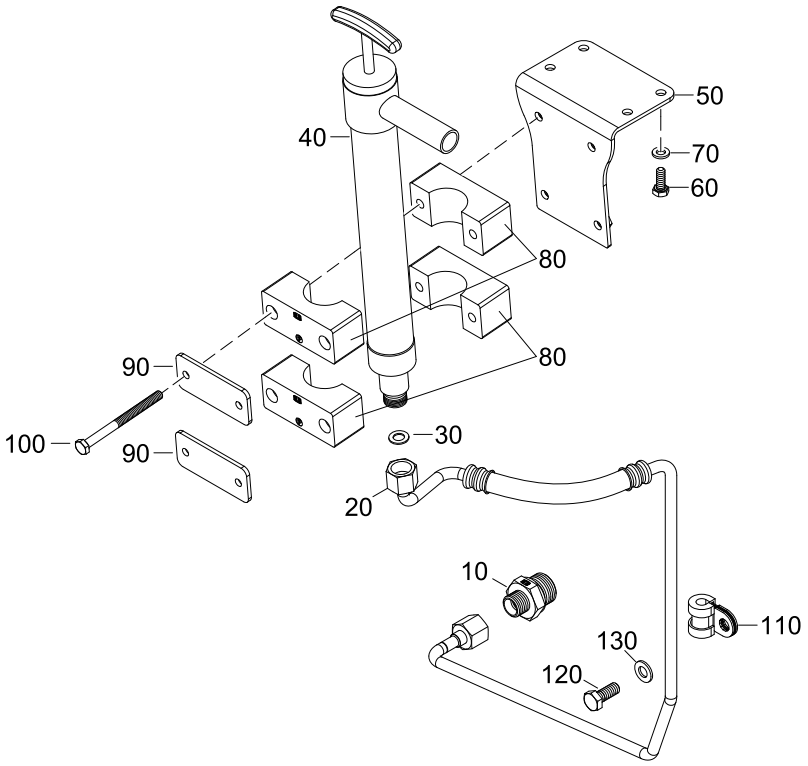

OIL DRAIN PUMP

SE266 S36 MARINE

55206284-0

Pos.	Part.-No.	Qty	Designation	Step
10	2180404-0	1	ADAPTER	.1
20	2180978-0	1	OIL HOSE ASSY.	.1
30	3098009-0	1	SEALING RING DIN 7603-A8x14-CU	.1
40	2180136-1	1	OIL DRAIN PUMP, HAND OPERATED	.1
50	2180946-0	1	BRACKET, MECH. OIL SUCTION PUMP	.1
60	3800233-0	4	HEX.HD.SCR. ISO 4017-M6x16-A2-70	.1
70	3930070-0	4	WASHER ISO 7089-6-140HV-A2	.1
80	2180405-1	2	PIPE CLAMP	.1
90	2180439-0	2	COVER PLATE	.1
100	9000452-0	4	HEX.HD.BOLT ISO 4014-M6x75-A2-70	.1
110	9001062-0	1	PIPE CLAMP RSGU1.8-20-W5	.1
120	3800224-0	1	HEX.HD.SCR. ISO 4017-M8x20-A2-70	.1
130	3930103-0	1	WASHER ISO 7089-8-140HV-A2	.1

STEYRMOTORS
INNOVATION WITH LIGHTNESS

SE266 S36 MARINE

HEATING UNIT, CIRCULATION PUMP

60126284-0

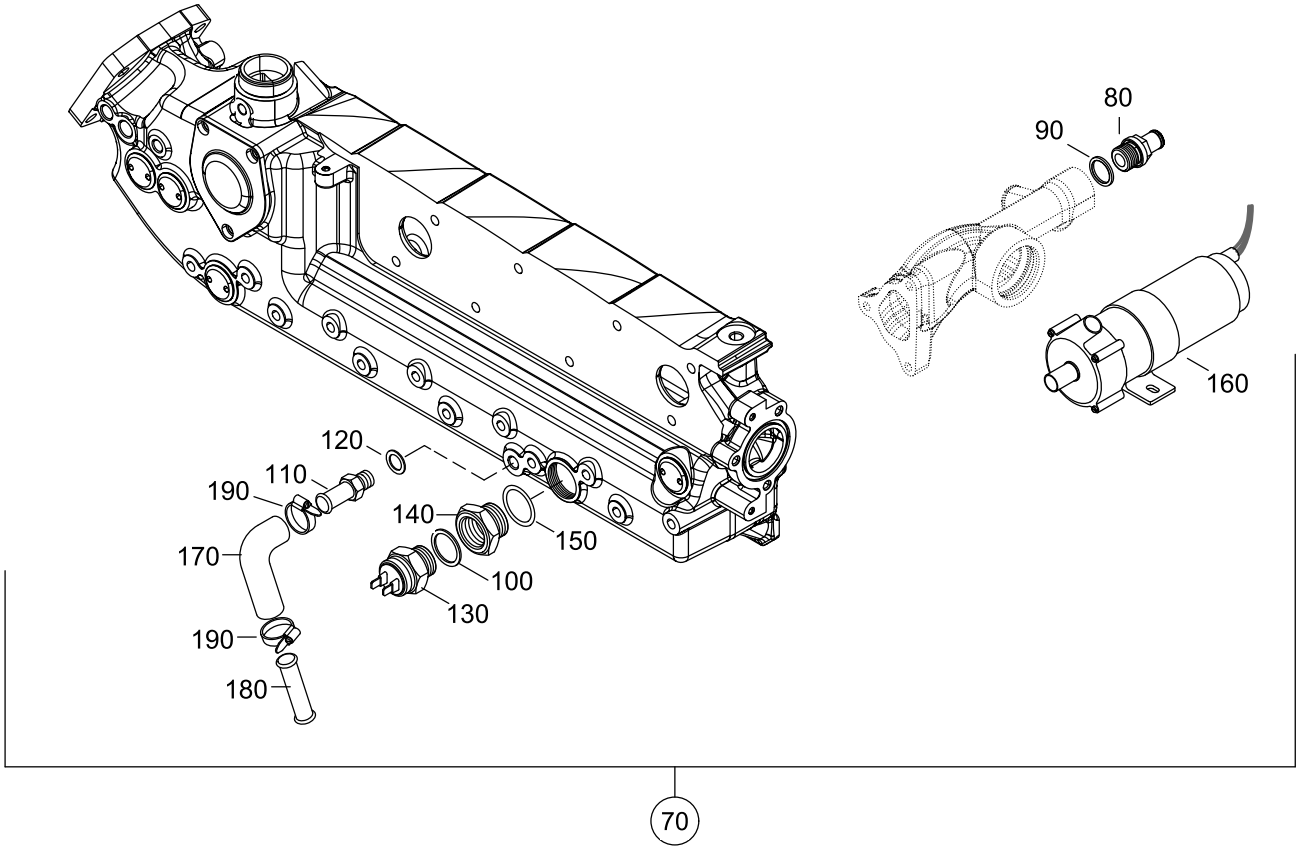

HEATING UNIT, CIRCULATION PUMP

SE266 S36 MARINE

60126284-0

Pos.	Part.-No.	Qty	Designation	Step
70	2181144-0	1	HOT WATER FITTING KIT W. PUMP	.1
80	9000648-0	1	SCREW-IN SOCKET M22x1,5-16	..2
90	9000815-0	1	PROFILED GASKET DIN 3869-22-FPM	..2
100	3098026-0	1	SEALING RING DIN 7603-A22x27-CU	..2
110	2178698-0	1	NIPPLE HEATER ON OILCOOLER	..2
120	3098013-0	1	SEALING RING DIN 7603-A12x18-CU	..2
130	2178771-0	1	THERMO SWITCH, HEATINGPUMP	..2
140	2180078-0	1	ADAPTER THERMO SWITCH	..2
150	2179242-0	1	O-RING 27x2,5	..2
160	2178772-0	1	CIRCULATION PUMP	..2
170	2181409-0	1	MOULDED HOSE RW, COOLING WATER 80°	..2
180	2181410-0	1	PIPE FITTING DM16	..2
190	2177753-0	2	HOSE CLAMP 16-25/9	..2