BETA MARINE

Operators Maintenance Manual

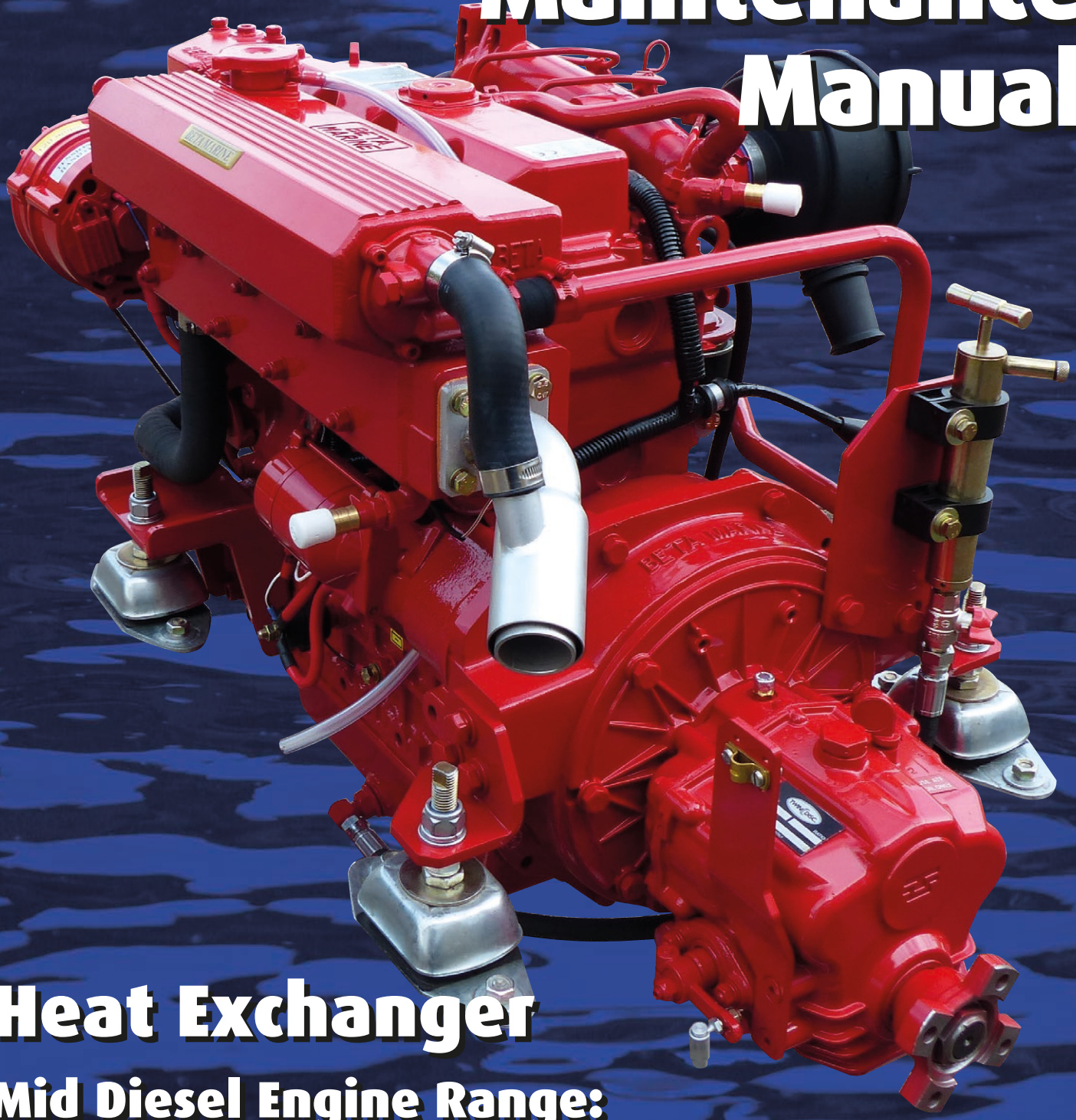

Heat Exchanger

Mid Diesel Engine Range:
Beta 43, Beta 50 & Beta 60

CALIFORNIA - Proposition 65 Warning: Diesel engine exhaust and some of its constituents are known to the state of California to cause cancer, birth defects and other reproductive harm.

Fig 1 Typical Heat Exchanger Cooling System

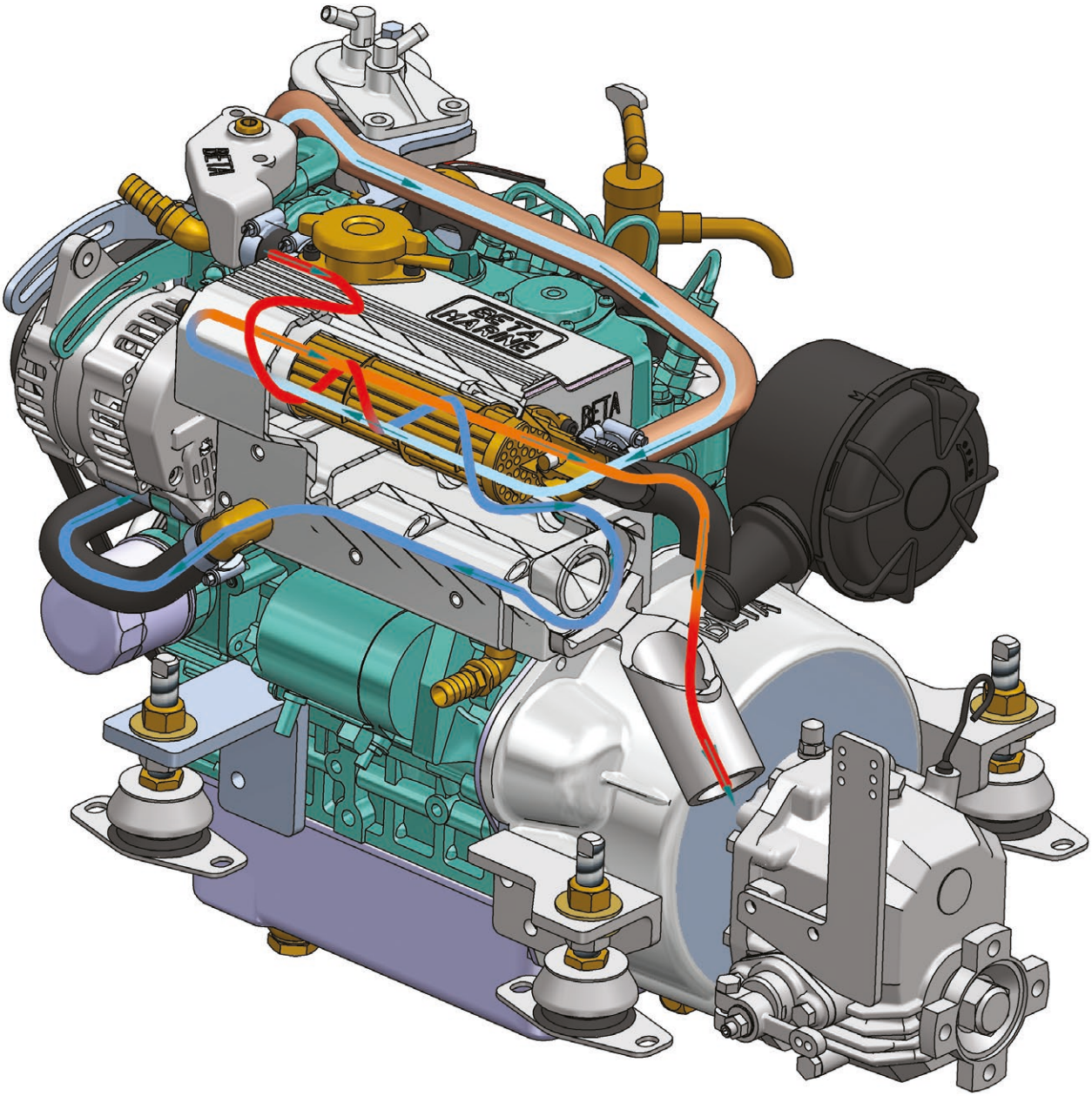

Engine Details

IMPORTANT! Please fill in these details at moment of purchase - it really will help you! (and it will really help us specify the correct spare parts for you).

Engine Type:	Power: bhp	Speed: rpm
BETA WOC NO:	**K**	
Gearbox Type:		
Purchased From:		
Invoice Number:		
Date Commissioned:		
Specification / Special Details:		

Contents

Engine details (to be completed now) 1

Introduction **3**

Engine identification 4

Initial receipt of the engine 4

Engine storage 4

Safety precautions **5**

Technical specifications **6**

SECTION 1: INSTALLATION GUIDELINES **7**

Ventilation 7

Engine mounting 9

Engine alignment - drives, flanges, flexible couplings 10

Exhausts and mounting exhausts 12

Cooling - sea water inlet system 15

Fuel supply and "leak off" 19

Calorifier connections (if fitted) 20

Electrical installation 22

SECTION 2: GUIDELINES FOR OPERATION OF THE ENGINE **26**

Important checks prior to initial use **26**

Initial start-up and bleeding the fuel system **26**

Starting and stopping **28**

SECTION 3: MAINTENANCE & SERVICE GUIDELINES **31**

Maintenance schedule 32

Lubrication - checking and changing oil 33

Fuel system - fuel / water separator, fuel lift pump, fuel filter 36

Cooling - fresh water system, heat exchanger 37

Sea water pump, heat exchanger 39

Tube stack and 'wasting zinc anode' 40

Belt tensioning adjustment 41

Air filter inspection / replacement 42

Electrical maintenance 42

Laying up - winterising 43

Troubleshooting **44**

Torque settings **55**

Wiring diagrams and general arrangement drawings index **56**

Exhaust emission - declaration of conformity **89**

Exhaust emission - durability **90**

Service record **94**

OPERATION AND MAINTENANCE MANUAL FOR THE FOLLOWING BETA MARINE ENGINES BASED ON KUBOTA

Beta 43, Beta 50 & Beta 60

WELCOME TO BETA MARINE

Thank you for purchasing a Beta Marine Engine. We have made this manual to provide you with important information and recommendations to ensure trouble free and economical operation of the engine.

As manufacturers we have obviously written this "Operators Maintenance Manual" from our 'involved technical viewpoint' assuming a certain amount of understanding of marine engineering. We wish to help you, so if you do not fully understand any phrase or terminology or require any explanations please contact Beta Marine Limited or its distributors and we will be pleased to provide further advice or technical assistance.

All information and recommendations given in this publication are based on the latest information available at the time of publication, and are subject to alteration at any time.

The information given is subject to the company's current conditions of Tender and Sale, is for the assistance of users, and is based upon results obtained from tests carried out at the place of manufacture and in vessels used for development purposes. We do not guarantee the same results will be obtained elsewhere under different conditions.

FREQUENTLY USED TOOLS

Useful tools when working on Beta 43, 50 & 60 engines are:

Sockets and/or spanners in sizes:

10, 12, 13, 14, 17, 19, 22 & 24mm

Allen key in sizes:

5, 6, 8 & 10mm

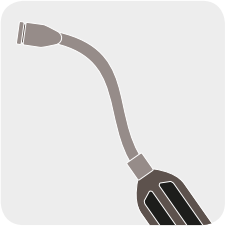

When working on jubilee clips on hoses in restricted or awkward positions a **7mm flex-drive socket** is highly recommended.

ENGINE IDENTIFICATION

IMPORTANT! - We are asking you to always provide the **WOC (Works Order Card) number and or the engine serial number** in all communications concerning your engine.

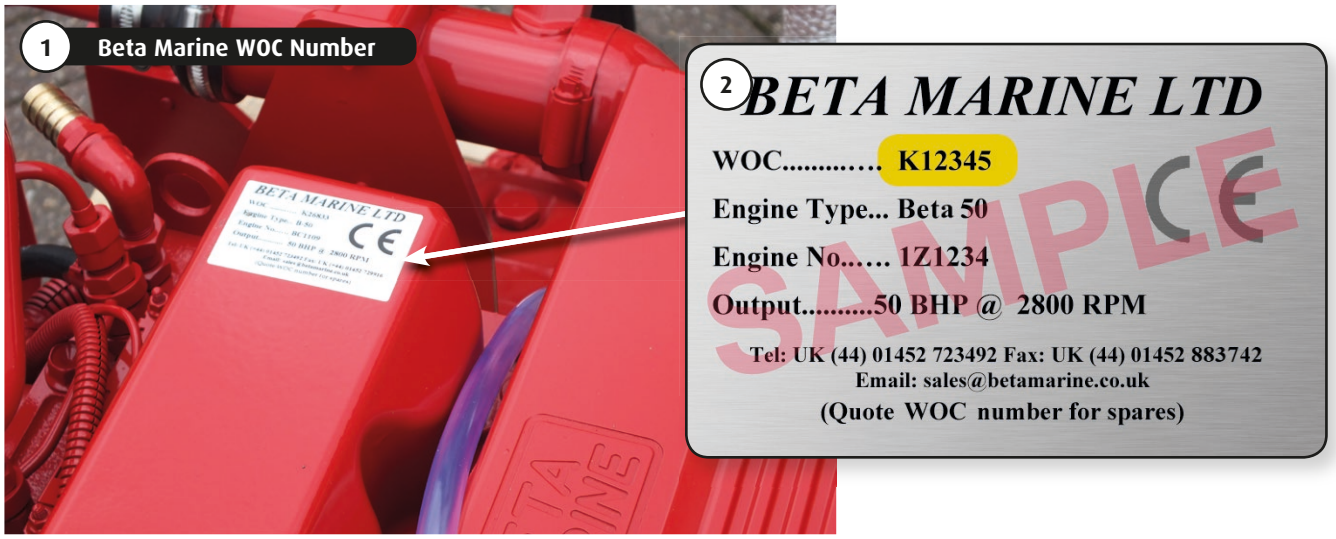

BETA 43, BETA 50 & BETA 60

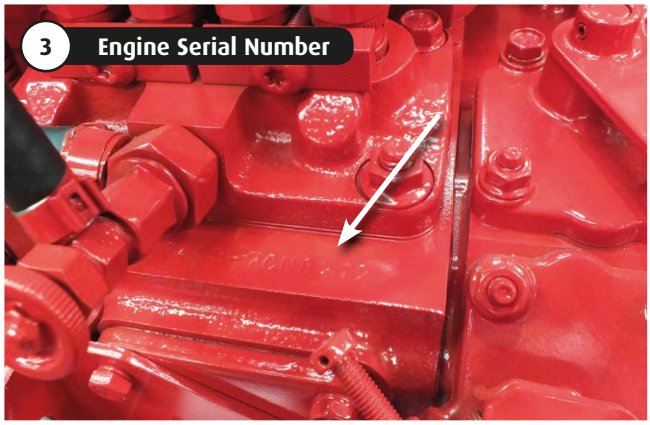

The engine serial number is shown on the rocker cover label. It is also stamped into the crank case just below the fuel injection pump, on the starboard side of the engine.

INITIAL RECEIPT OF THE ENGINE

A full inspection of the engine must be made **immediately on delivery** to confirm that there is no damage. If there is any damage then write this clearly on the delivery note and inform your dealer or Beta Marine within 24 hours. A photograph would always help.

ENGINE STORAGE

The engine must be stored in a dry, frost free area and this is best done in its packing case. If storage is to be more than six months then the engine must be inhibited (contact your dealer or Beta Marine). Failure to inhibit the engine may result in the formation of rust in the injection system and the engine bores, this could invalidate the warranty.

⚠ Safety Precautions!

A Keep the engine, gearbox and surrounding area clean, including the area immediately below the engine.

B Drives - Power Take Off Areas

i) Gearbox Output Flange

The purpose of a marine diesel propulsion engine is to provide motive power to propel a vessel. Accordingly the gearbox output shaft rotates at between 280 and 2400 rev/min. This flange is designed to be coupled to a propeller shaft by the installer and steps must be taken to ensure adequate guarding.

ii) Forward End Drive

Engines are supplied with unguarded belt drives to power the fresh water pump and battery charging alternator. The installer must ensure that it is not possible for injury to occur by allowing access to this area of the engine. The three pulleys run at high speed and can cause injury if personnel or clothing come in contact with the belts or pulleys, when the engine is running.

iii) Power Take Off Shaft (Engine Mounted Option)

Shaft extensions are available as an option and rotate at between 850 and 3600 rev/min. If contact is made with this shaft when the engine is running, injury can occur.

C Exhaust Outlet

Diesel marine propulsion engines emit exhaust gases at very high temperatures - around 400 - 550°C. Engines are supplied with either wet exhaust outlet (water injection bend) or dry outlet (dry exhaust stub) - see option list. At the outlet next to the heat exchanger/header tank, the exhaust outlet can become very hot and if touched, can injure. This must be lagged or avoided by ensuring adequate guarding. It is the responsibility of the installer to lag the exhaust system if a dry system is used. Exhaust gases are harmful if ingested, the installer must therefore ensure that exhaust pipes are led overboard and that leakage in the vessel does not occur.

D Fuel

i) Fuel Lines

Diesel engines are equipped with high pressure fuel injection pumps, if leakages occur, or if pipes fracture, fuel at a high pressure can harm personnel. Skin must be thoroughly cleaned in the event of contact with diesel fuel.

ii) Fuel Supply Connections

Engines are supplied with 8mm compression fittings. The installer must ensure that when connections are made, they are clean and free of leaks.

E Oil

The Beta propulsion unit is supplied with 2 dipsticks, one for the engine and one for the gearbox. Ensure dipsticks are returned and secure after checking, if not oil leaks can cause infection when touched. All oil must be removed from the skin to prevent infection.

F Scalding

An engine running under load will have a closed circuit fresh water temperature of 85° to 95°C. **The pressure cap on the top of the heat exchanger must not be removed when the engine is running**. It can only be removed when the engine is stopped and has cooled down.

G Transportation / Lifting

Engines are supplied on transportable pallets. Lifting eyes on engines are used for lifting engine and gearbox assembly only, not the pallet and associated kit.

GENERAL DECLARATION

This machinery is not intended to be put into service until it has been incorporated into or with other machinery. It is the responsibility of the purchaser / installer / owner, to ensure that the machinery is properly guarded and that all necessary health and safety requirements, in accordance with the laws of the relevant country, are met before it is put into service.

Signed:

J A Growcoot, C.E.O, Beta Marine Limited.

NOTE: Recreational Craft

Where applicable, the purchaser / installer / owner and operator must be responsible for making sure that the Recreational Craft Directive 94/25/EC is complied with.

Technical Specifications

Standard Engines		Beta 43	Beta 50	Beta 60
Cylinder		4	4	4
Bore (mm)		83	87	87
Stroke (mm)		92.4	92.4	102.4
Displacement (cc)		1999	2197	2434
Combustion		3 Vortex, naturally aspirated, indirect injection		
Power Output EN ISO 8665	kW	30.0	33.0	33.6
	at rev/min	2,800	2,800	2,700
Maximum Torque	N m	130.3	143.2	158.6
	at rev/min	1,600	1,600	1,600
Capacity of standard sump (litres)		9.5	9.5	9.5
Capacity of shallow sump (litres)		7.0	7.0	7.0
Nett dry weight with gearbox (kg)		270	300	310
Fuel		Diesel fuel oil to EN 590 or ASTM D975		
Coolant		50% antifreeze : 50% water		
Coolant capacity approx. (H/E litres)		7.4	7.4	7.4
Electric starting - standard		12 Volt		
Starter motor output (kW)		1.4	1.4	2.0
Alternator (battery charging) standard		70 Amps		
Min. recommended battery capacity		12 Volt, 120 Ah (600 CCA Minimum)		

Maximum Angle of Installation: 15° flywheel up or flywheel down when static; and up to 25° when heeling.

Rotation: Anti-clockwise on flywheel, clockwise on output gearbox output flange - for use with right hand propeller in ahead, with mechanical gearboxes. Hydraulic gearboxes can be left or right handed.

Fuel: Diesel fuel must conform to EN590 or ASTM D975.

Engine Lubrication: Engine oil must meet API Classification CF (CD or CE have been superseded by CF).

Gearbox Lubrication: See gearbox operator's manual for the gearbox oil type and capacity.

Oil Pressure: Minimum (tickover) 0.5 bar.

Power Outputs: These comply with EN ISO 8665 propeller-shaft power.

1. Declared powers are measured at the gearbox output flange (as coupled to the propeller shaft) as per EN ISO 8665, developed from our standard engine specification, including gearbox and accessories as detailed in our current price lists. Additional accessories or alternative gearboxes may affect the declared powers. Declared power outputs are subject to the stated tolerance band.
2. Operation at parameters outside the test parameters may affect the outputs / powers.

Section 1

INSTALLATION RECOMMENDATIONS

The installation details are basic guidelines to assist installation, however due to the great diversity of marine craft it is impossible to give definitive instructions.

Therefore Beta Marine can accept no responsibility for any damage or injury incurred during the installation of a Beta Marine Engine whilst following these guidelines.

- All engines shall be placed within an enclosure separated from living quarters and installed so as to minimise the risk of fires or spread of fires as well as hazards from toxic fumes, heat, noise or vibrations in the living quarters.
- Unless the engine is protected by a cover or its own enclosure, exposed moving or hot parts of the engine that could cause personal injury shall be effectively shielded.
- Engine parts and accessories that require frequent inspection and/or servicing must be readily accessible.
- The insulating materials inside engine spaces shall be non-combustible.

VENTILATION

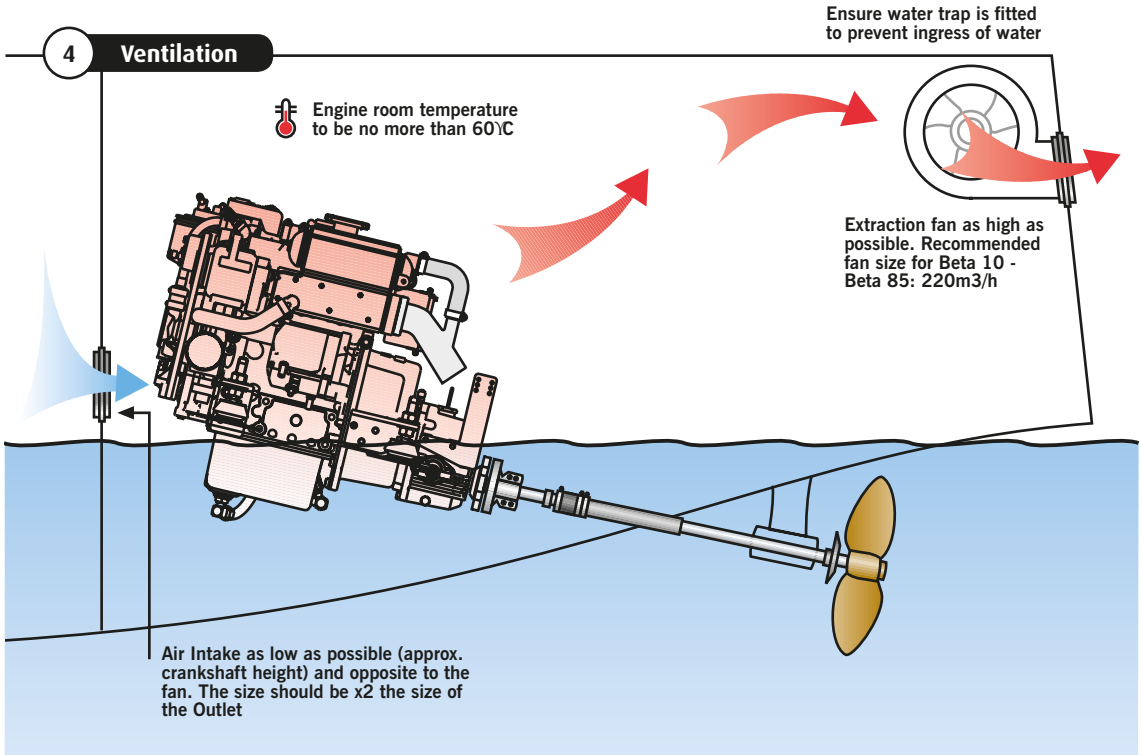

The engine compartment needs air.

a) as air (oxygen) to burn the diesel fuel, and

b) as air to keep the engine cool (still hot at 100°C) by ventilation.

It is important that the engine compartment has adequate ventilation, and **this is your responsibility**. If there is no ventilation the engine can overheat and damage can be caused. As a general statement an engine will produce radiated heat - approximately equal to $^1/_3$ of the engine output power. Also the larger battery charging alternators create lots of heat. (A symptom of overheating problems is often black belt dust). If you have any doubts about the temperature of your engine compartment please check with a thermometer on a hot day, the maximum temperature in the engine compartment should be less than 70°C - the cooler the better!

Engine compartment ventilation is normally best with two holes; an **inlet** allowing colder air to enter below to the alternator and drive belts and a second **outlet** (about the same size) for the hot air to rise and ventilate out from the top of the engine compartment.

The required air flow volumes in m^3/min = 0.05 x engine power in hp (naturally aspirated) or 0.06 x engine power in hp turbo-charged aspirated. Installations require a good quality reliable electric ventilation fan wired into the ignition switch to remove the hot air. The required air flow volumes in m^3/min = 0.05 x engine power in hp.

Typical ventilation sizes

	10hp	**20hp**	**30hp**	**40hp**	**50hp**	**75hp**	**100hp**	**150hp**
Combustion	14 cm^2	28 cm^2	43 cm^2	57 cm^2	71 cm^2	106 cm^2	142 cm^2	213 cm^2
Ventilation	13 cm^2	25 cm^2	37 cm^2	50 cm^2	62 cm^2	92 cm^2	123 cm^2	185 cm^2
Inlet / Outlet dia.	6 cm	9 cm	11 cm	12 cm	13 cm	16 cm	19 cm	22 cm

INSTALLATION RECOMMENDATIONS FOR KEEL COOLED ENGINES

Keel cooled engine overheating is sometimes caused by:

a) Not fully venting the engine cooling system of air. It is necessary to remove all air from the cooling system - including the “skin” tanks and (if fitted) the Calorifier and associated piping.

b) Incorrectly sized “skin” tanks that have been sized for ‘usual’ canal use, rather than maximum engine output that can sometimes be required on fast flowing rivers. An additional “skin” tank may need to be fitted.

ENGINE MOUNTING

To ensure vibration free operation, the engine must be installed and correctly aligned on substantial engine bearers, extending as far forward and aft as possible, well braced and securely fastened to form an integral part of the hull. The engine must be installed as low as possible on the flexible mount pillar stud. This will limit vibration and extend the life of the flexible mount. To assist with engine replacement we offer 'Special Engine Feet' manufactured to your dimensions, as an optional extra to suit your existing engine bearers and shaft alignment / installation.

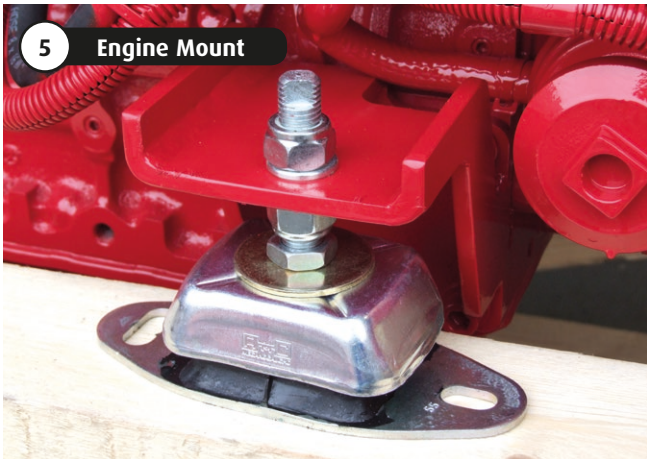

⚠ WARNING!

- Do not set the engine feet high up the flexible mount pillar stud. This will cause excessive engine movement and vibration. Pack steel shims under the flexible mount and ensure that the flexible mounting is securely bolted to the engine bearer.

- The pillar stud on the flexible mount is secured into position by the lower locknut, do not forget to tighten this. **Also ensure that the stud is not screwed too far through the mounting body so that it can touch the bearer. This will cause vibration and knocking noises which are very hard to find!** If the flexible mounting is too far offset then the loading on the flexible mounting will cause premature failure, modifications are needed.

6 Engine Mount Alignment

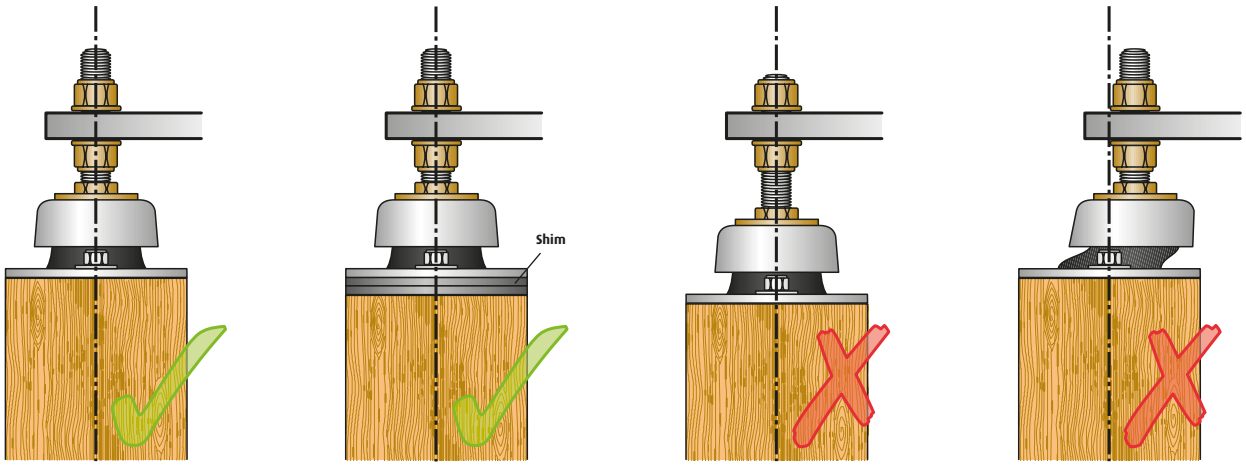

Recommended
Correct height and positioning

Acceptable
Shim(s) required to achieve correct height and positioning

NOT Recommended
Positioning too high on the pillar stud - requires shims

NOT Acceptable
NOT aligned - requires bearer modifications to correct

ENGINE INSTALLATION AT AN ANGLE

Beta Marine propulsion engines can be installed at angles up to a maximum of 15° flywheel up or flywheel down when static, and can be run at up to 25° when heeling. However if you are considering installing above 12° please contact Beta Marine or alternatively consider the 7° down angle gearbox. When our engines are installed at varying angles of inclination the normal markings on the dipstick should be disregarded. It is probably better to totally drain the sump, and completely refill the engine sump with the recommended quantity / volume of lubricating oil - noting its position on the dipstick - and then marking the dipstick accordingly (don't forget to replace the oil filter). **If in doubt ask Beta Marine!**

ALIGNMENT

To obtain accurate alignment the flexible mountings must be adjusted until alignment is attained, and the mountings must be locked in position. The engine / gearbox unit has to be aligned with the propeller shaft in two ways. The traditional engine alignment method involves measuring with either feeler gauges or a DTI (Dial Test Indicator) mounted on a magnetic foot so that they are aligned within 0.125mm (0.005”). (Obviously the propeller shaft must be centered in the stern tube and running true - through the cutless bearing; if the propeller shaft is not correctly centered you will experience vibration).

ANGULAR ALIGNMENT

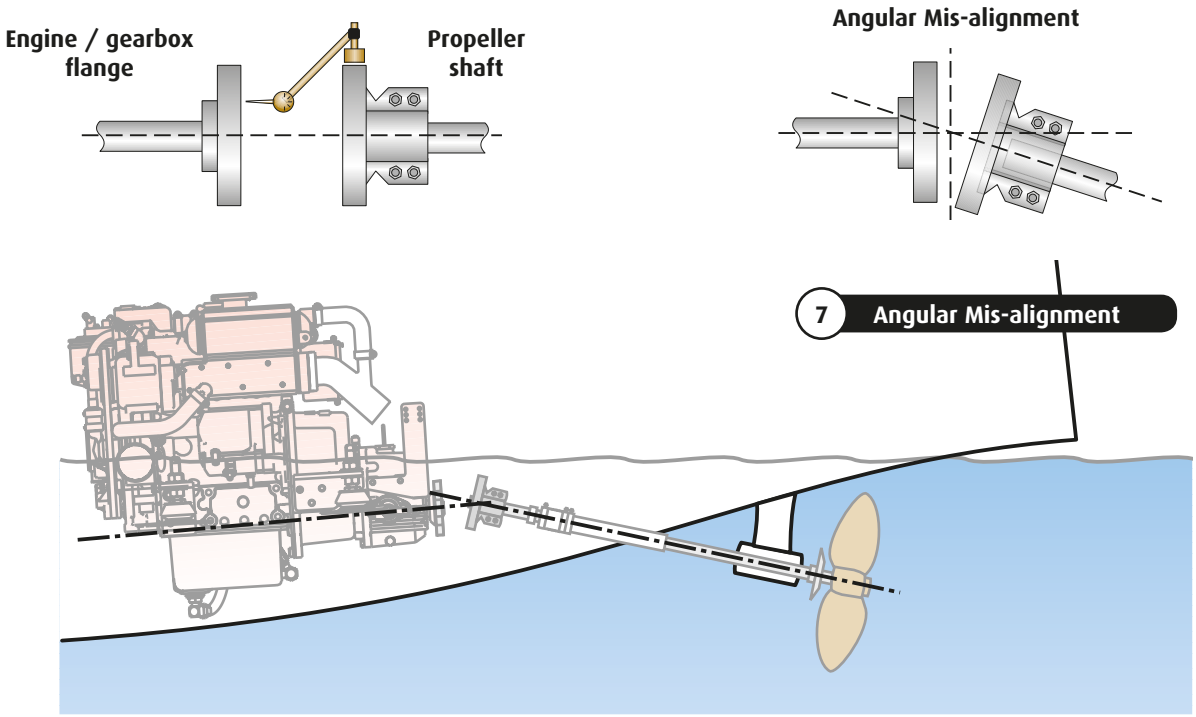

PARALLEL ALIGNMENT

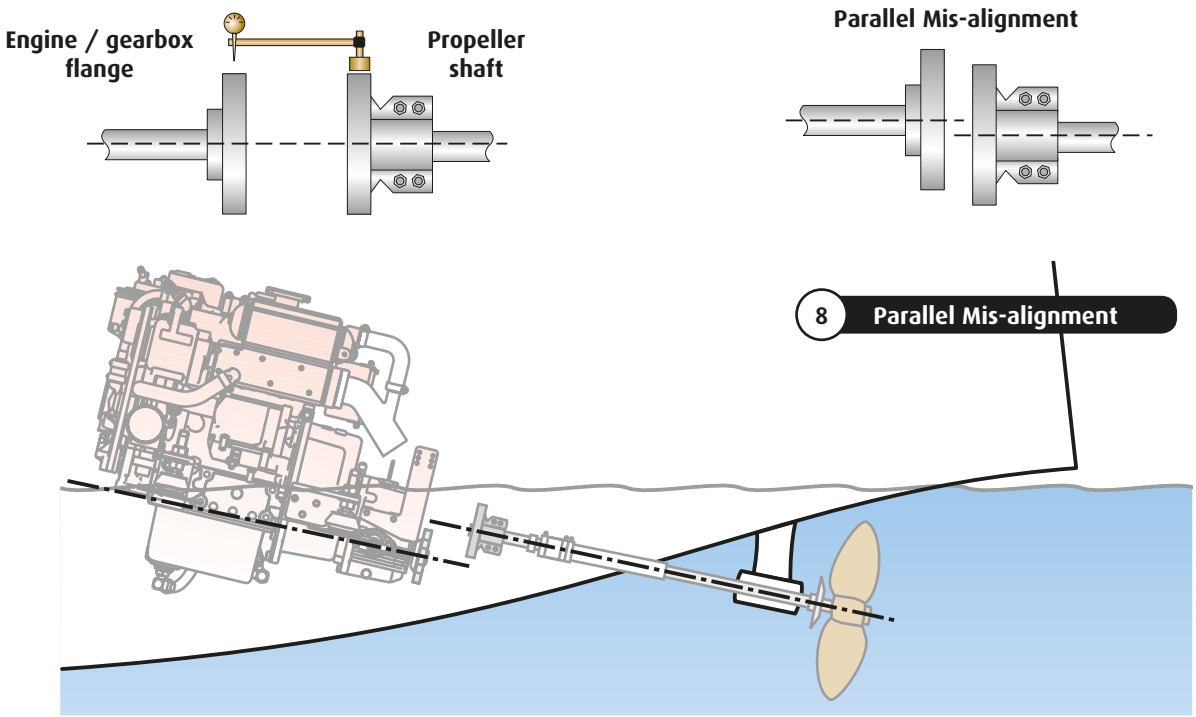

The engine mountings and the couplings must now be tightened in position and the alignment re-checked.

FLEXIBLE OUTPUT COUPLINGS

A flexible coupling is mounted on the gearbox output flange and is strongly recommended in almost every case. Flexible couplings do not resolve bad alignment, they are designed to absorb torsional vibrations from the propeller (transmitted along the propeller shaft).

We normally offer two types:

R&D with a flexible nylon disc and optional Clamp Coupling – a very good economical solution.

9 R&D Flexible Couplings

10 R&D Clamp Couplings - Optional

The excellent 'CentaFlex' coupling design includes lots of rubber to absorb torsional shocks and loads. The 'CentaFlex' coupling is complete, replacing both the R&D flexible and the R&D clamp couplings above.

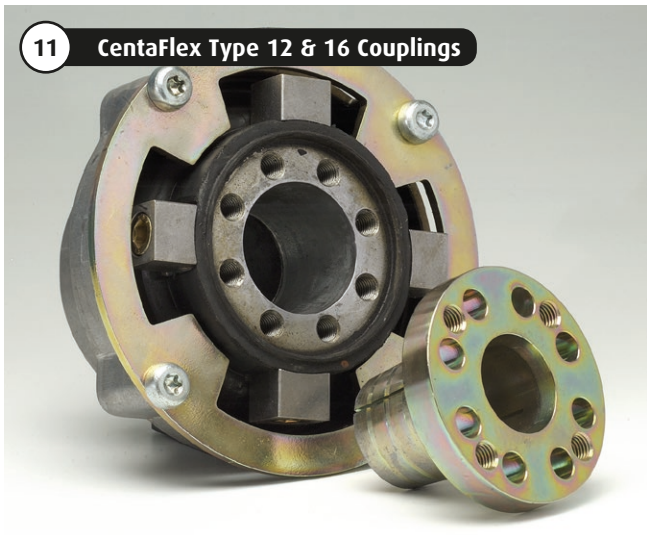

11 CentaFlex Type 12 & 16 Couplings

NB Constant Velocity Drive-Shafts

When fitting a constant velocity drive-shaft it maybe necessary to have the standard engine drive plate that is supplied replaced to avoid torsional noise problems. Please contact us for technical guidance.

EXHAUST SYSTEMS

There are two main types of exhaust system:

1) **Standard yacht - wet exhaust system with a water injection bend and waterlock silencer**
2) **Dry exhaust system (see page 18)**

We recommend care when designing your exhaust system. The most important aspect is to ensure that water cannot enter the engine's combustion chamber from the exhaust system (this applies to both wet and dry exhaust systems).

STANDARD YACHT - WET EXHAUST INSTALLATION

Owners need to be aware of three major problems that can easily occur when installing an engine in a sailing yacht or motor boat and allowing the engine to 'hydraulic lock'.

- Seawater syphoning past worn impellors in the seawater pump, flooding the exhaust system, and back filling into the combustion chamber when the engine is stopped.
- Seawater washing into the combustion chamber from the exhaust system due to either a very shallow exhaust run from the injection bend to the waterlock silencer, or because the waterlock silencer is too small to accept the total amount of cooling water in the exhaust hoses, or both. This can happen when the yacht is sailing into a big sea and a surge is set up in exhaust system as the yacht pitches - with the engine switched off.
- Waves forcing water up the exhaust due a poorly designed system with no 'gooseneck'. Small work boats moored on exposed beaches are very vulnerable to this as waves hit the stern before the boat can swing into the wind on a rising tide.

It is therefore very important to ensure that the engine will not 'hydraulic lock'. This can be a problem with engine installations. When water enters the combustion chamber and 'hydraulics' against the rising piston, a bent con rod, emulsified engine oil and a wrecked fuel pump can be the result. It's best avoided!

If your engine is installed below the water line, the potential for water entering the engine is considerably increased. The important dimension that must be measured is from the normal 'static' sea level to the point at where the cooling water is injected into the exhaust - this should be a minimum of 30 cms. If this can not be achieved the following options must be taken (see 12, 13 and 14).

12 Standard Exhaust System

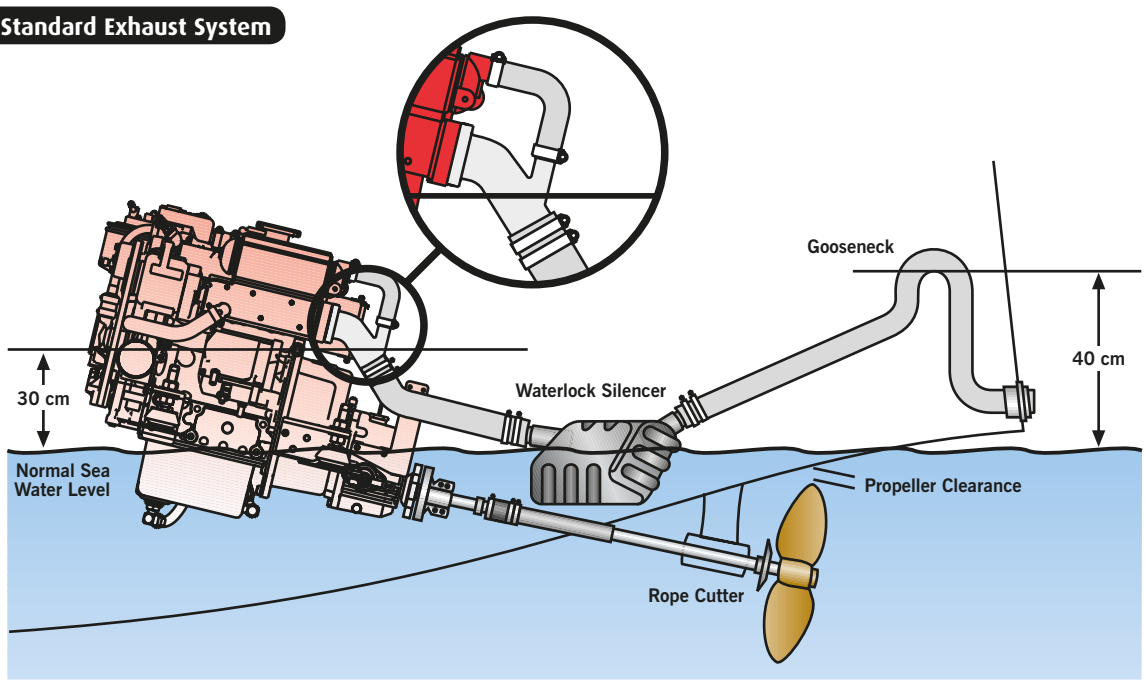

HIGH-RISE EXHAUST

In yachts, engines are mostly installed low down and often below the water line. There are several ways to avoid cooling water entering the engine.

Syphoning of cooling water can occur when the rubber impellor of the sea water pump becomes worn. If our standard injection bend is too low then we can offer a high-rise injection bend that adds 15 cms to the height.

If this is still not enough then you have to fit an 'antisyphon' / vacuum valve 50 cms above the 'loaded' water line sea level (see 14 below).

13 Exhaust with High Rise

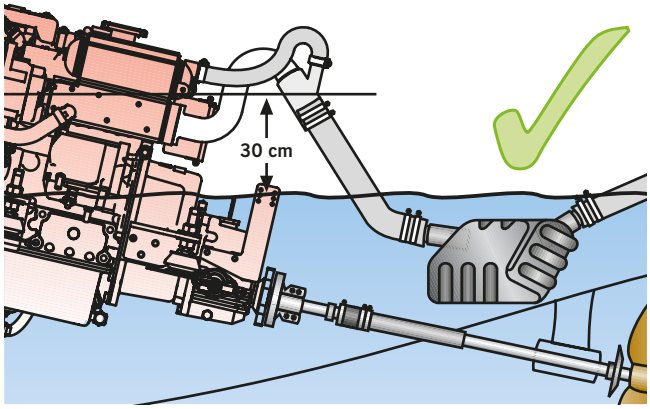

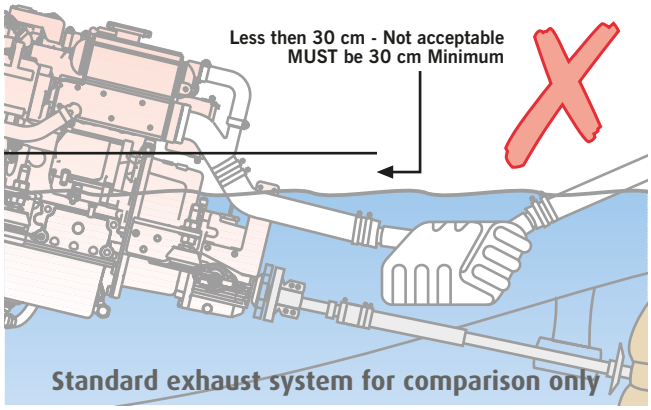

EXHAUST WITH ANTI-SYPHON VALVE

When the engine is installed with the standard injection bend - and the water injection point is still less than 30 cms above the 'static' seawater level or is below it, then you should either install a high rise injection bend adding 15 cms to the height or an anti-syphon valve to resolve the problem.

Some installers will always fit an 'Anti-Syphon' valve in yachts, regardless of the position of the injection bend - just to be as safe as possible. When fitting an anti-syphon valve to a yacht, it must be mounted as near as possible to the centerline so that there is no possibility that the valve goes under the water line when the yacht heels over.

⚠ IMPORTANT!

These valves need to be checked regularly as they have been known to block up with salt crystals over time.

14 Exhaust with Anti-syphon Valve

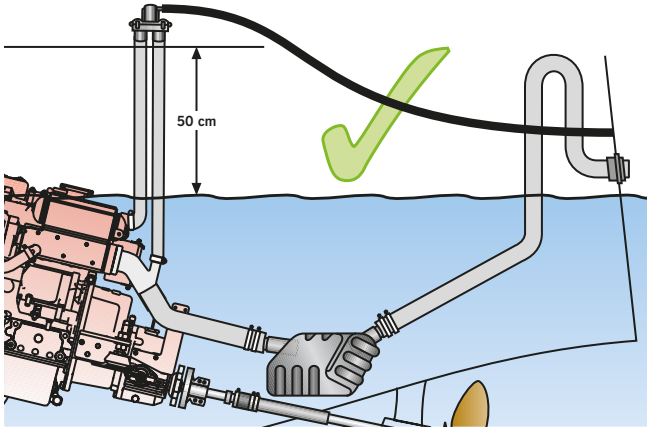

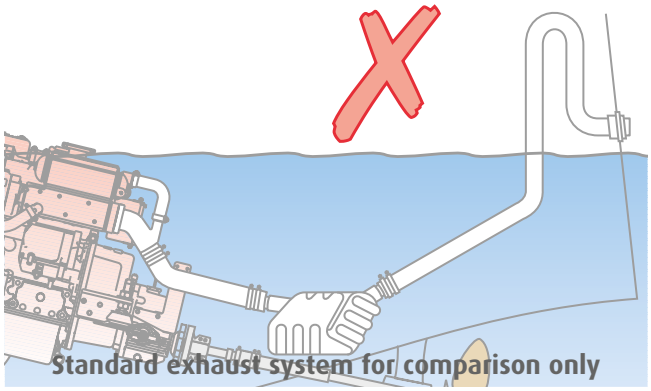

WATERLOCK / SILENCER

You must always fit a waterlock / silencer to stop any water in the exhaust system back filling the engine. The water lock should always be fitted at least 30 cms away from the injection bend and at least 30 cms below the injection bend, being as low as reasonably possible, so that all the water can drain down into it. The waterlock should have sufficient capacity to hold an exhaust system full of water - draining into it.

15 Waterlock / Silencer

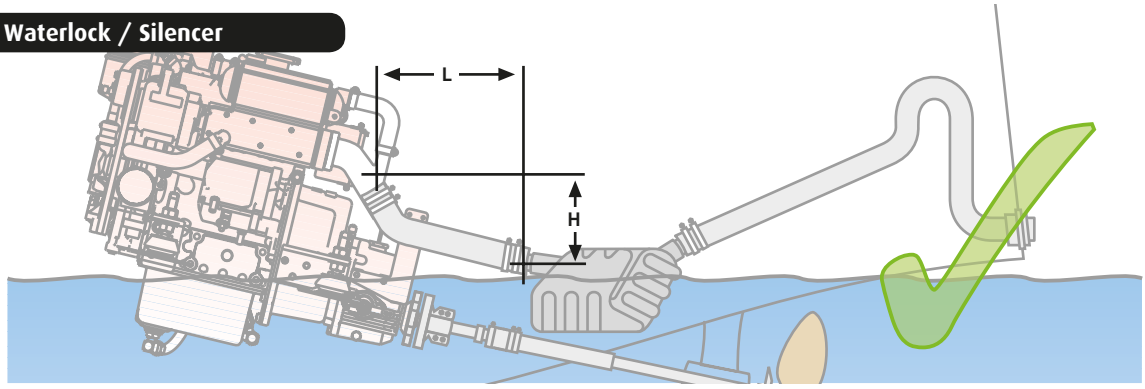

You should always create a 'gooseneck' with the exhaust hose (or purchase a propriety one) by raising the exhaust hose 40 cms above the waterline before exiting the transom at least 5 cms above the waterline. This will stop any waves pushing seawater down the exhaust.

Position of silencer in relation to exhaust hose length:

Length (L)	Height (H)
30 cm	30 cm
120 cm	40 cm

⚠ IMPORTANT!

If measurement **'H'** cannot be met, a high rise exhaust injection bend must be installed so that any residual water flows / drains into the waterlock / silencer or overboard.

With longer lengths of exhaust hose you may need to support the hose to avoid a drooping hose and water build up.

16 Exhaust Hose 'Gooseneck'

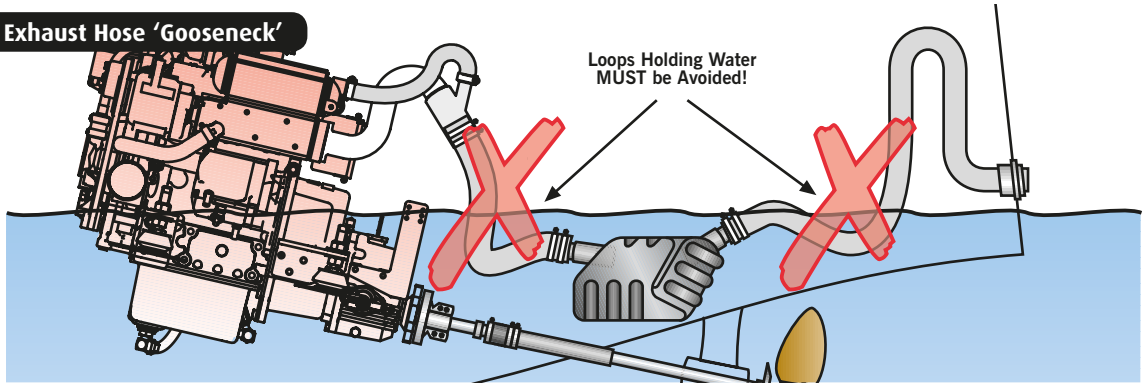

17 Exhaust 'Gooseneck'

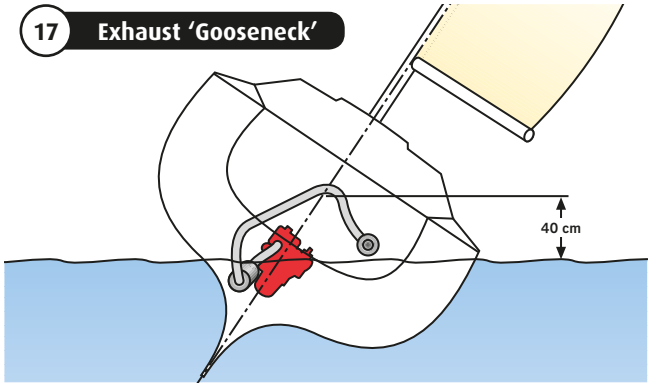

SEA WATER INLET FOR HEAT EXCHANGER COOLED ENGINES

Your engine is fitted with a gear driven sea water pump which sucks in seawater (raw water) to cool the closed circuit system via the heat exchanger.

Engine	Seacock Inlet / Seawater Pump Hose I.D.
Beta 10 to Beta 38	19 mm ($^3/_4$") min.
Beta 43 to Beta 60	25 mm (1") min.
Beta 75 to Beta 105	28 mm ($1^1/_4$") min.

1. It is very important that the seawater inlet should have a strainer system either **'A'** built into the sea cock, or **'B'** a high level system with visual inspection glass (as shown) mounted just above the water line.
2. Good access to the inlet sea cock from inside your boat is essential so that plastic bags or seaweed trapped in the intake can be poked out.
3. All pipe work should have approved marine grade stainless steel hose clips. Any loose clamps or bad connections can cause flooding and sinking of the vessel. It is accepted practice that two stainless steel clips should be used at each end of raw water pipes for security. Ensure that you use the correct grade of hose.

Note: The maximum lift of the sea water pump is 2m when primed.

18 Sea Water Inlet / Filter

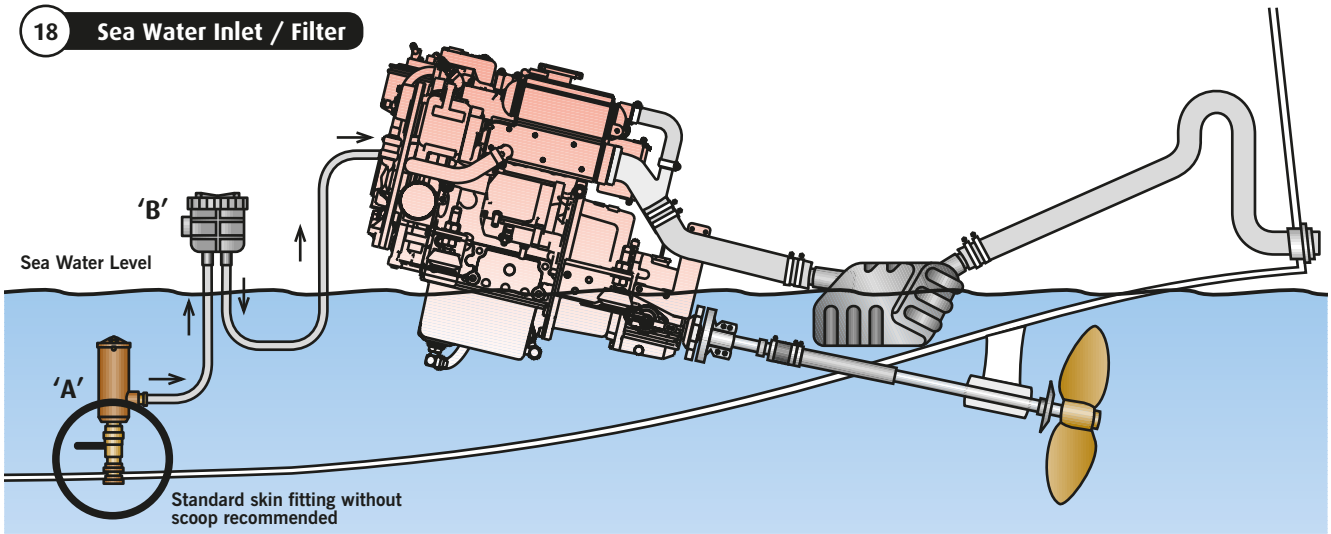

4. A normal inlet sea cock type **'A'** (as shown in 18 above) is recommended as this can be 'rodded out' to remove blockages. We do not recommend the use of 'Scoop' type water pickups, because if fitted the wrong way around the water will be forced through the pump and into the exhaust system whilst the vessel is sailing. This is very dangerous as the exhaust will eventually fill and sea / raw water will back up into the engine through the exhaust valve. Catastrophic failure will result as soon as the engine is restarted.

19 Sea Water Inlet - Scoop

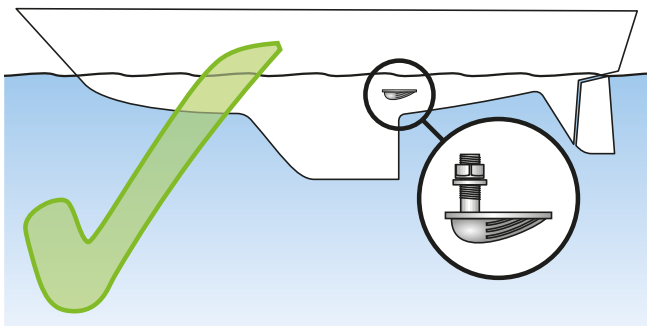

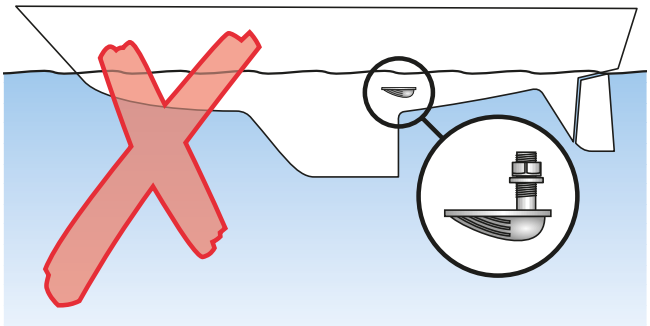

STERN GEAR LUBRICATION

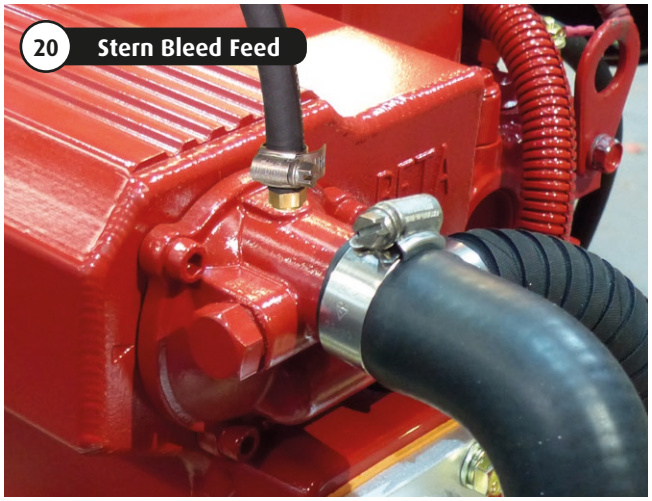

20 Stern Bleed Feed

IMPORTANT! - ENGINE COOLING

If a 'water feed take off' is required for stern gear lubrication of the cutlass bearing or if you have an anti-syphon valve with 'continuous bleed', then the connection must be taken **after** the heat exchanger (**not** before) and the maximum size should be an 1/8 inch BSP fitting with a 5mm hose.

(Installations that have excessive water 'bleed' will effect combustion temperatures and exhaust emissions; and taken to the extreme could either seize the engine and/or melt the exhaust system).

21 Standard Exhaust with Stern Bleed

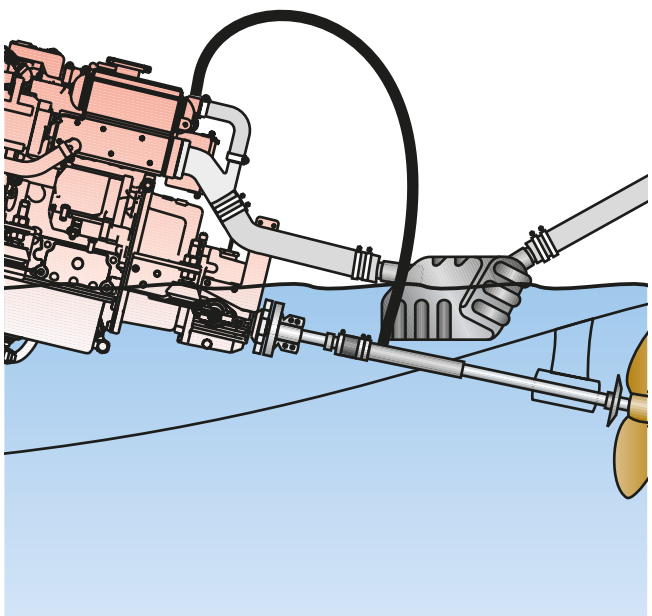

Beta 10 to Beta 60 - can be connected to the heat exchanger end cap using our 'Stern Bleed kit' and drilling and tapping the end cap.

22 Stern Bleed with Anti-syphon Valve

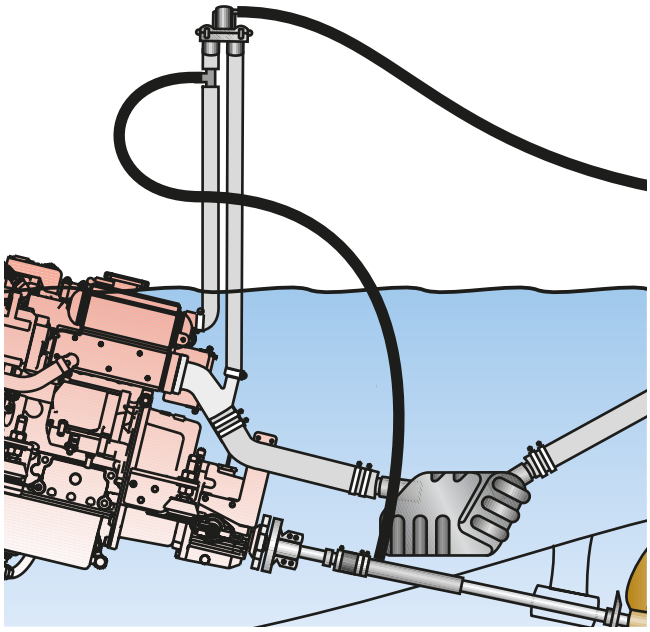

Beta 75 upwards - need a 'T' piece with an 1/8" BSP connection fitted just after the heat exchanger as shown in the drawing. It is important that this 'feed' is taken from the engine side of an anti-syphon valve or you can 'hydraulic' the engine with catastrophic results.

PROPELLER CLEARANCE

There must be a propeller clearance between the tip of the propeller blade and the underside of the hull.

This should be a minimum of 10% of the diameter of the propeller (some say 15%) to reduce 'tip noise'.

23 Propeller Clearance

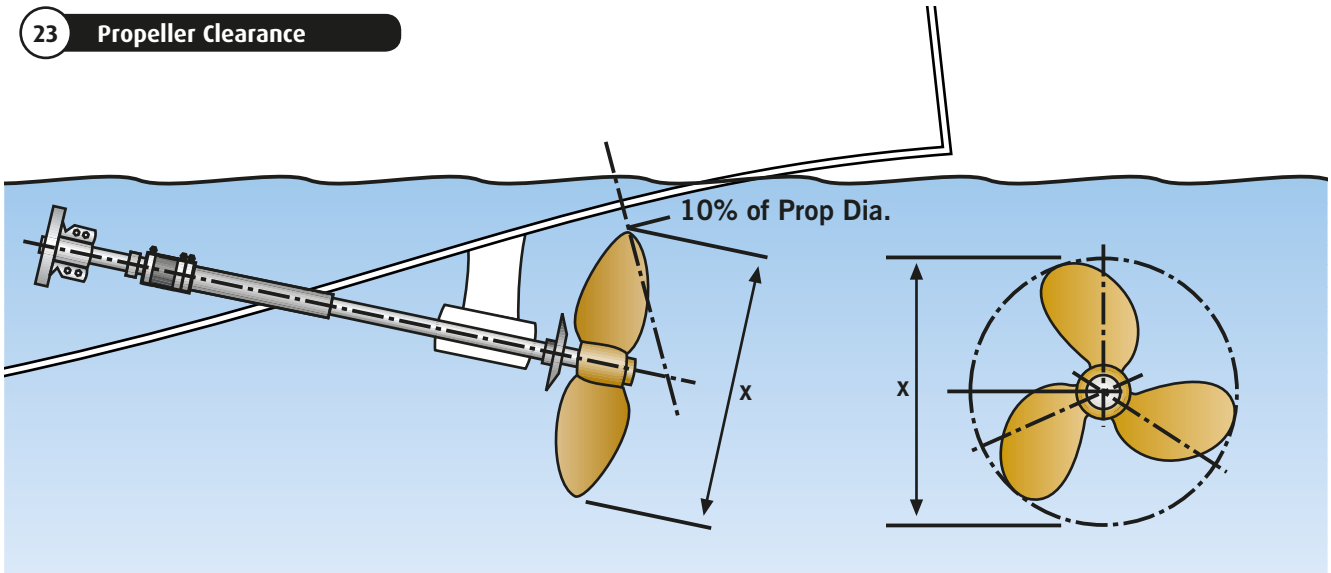

EXHAUST HOSE

Wet exhaust hose should be matched to the injection bend diameter. An engine correctly installed in accordance with this handbook will meet the emission requirements of the RCD (Recreational Craft Directive).

Engine	Exhaust Hose I.D.
Beta 10 to Beta 60	50 mm
Beta 75 & Beta 90	60 mm
Beta 105	75 mm

EXHAUST BACK PRESSURE

Keep exhaust systems to a minimum length and have gradual bends (NOT right angle elbows). Exhaust back pressure should be as low as possible; it is increased by long exhaust length and sharp bends. Back pressure should be measured with the complete exhaust system connected and the engine running at full speed. The correct measuring point is before the injection bend (at the manifold flange).

Engine	Exhaust Back Pressure
Beta 10 to Beta 25	Max. 70 mm Hg
Beta 30 to Beta 60	Max. 80 mm Hg
Beta 75 & Beta 90	Max. 90 mm Hg
Beta 105	85 to 115 mmHg

DRY EXHAUST INSTALLATION

a) An engine correctly installed in accordance with this handbook will meet the emission requirements of the RCD (see back of manual).

b) Keep exhaust systems to a minimum length and have gradual bends, refer to 'exhaust back pressure' bottom of page 17 for futher information.

c) The dry exhaust system installed in a canal boat or work boat should be $1^1/_2$" minimum internal diameter.

The engine is fitted with a $1^1/_2$" BSP male connector stub as standard - Valid for exhaust systems up to 3 metres in length. A flexible exhaust bellows and dry exhaust silencer should be used. It is up to the installer to work out his own pipe run but care should be taken as follows:

- Never use a flexible exhaust bellow as a bend, it will crack, always keep them straight.
- Ensure that rain water (or any other water - say from the side of the loch) cannot enter the exhaust port and run back down the system, flooding the silencer and eventually the engine (see drawings below).
- The system should be lagged if there is any danger of the crew getting near it.
- A dry exhaust system will give off considerable heat and suitable insulation and ventilation must be provided.

24 Dry Exhaust System

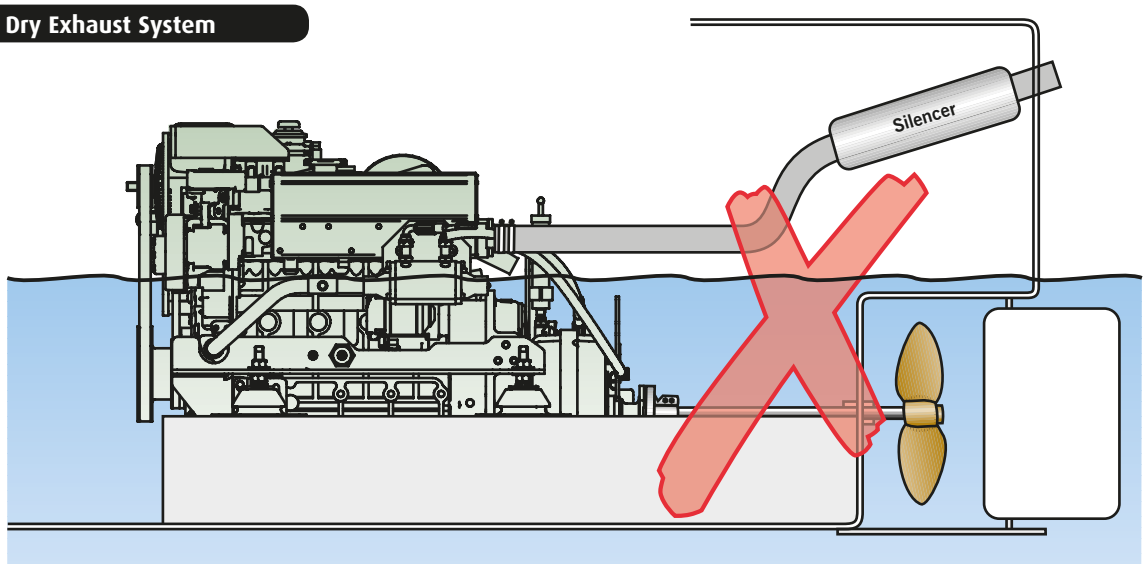

25 Dry Exhaust System

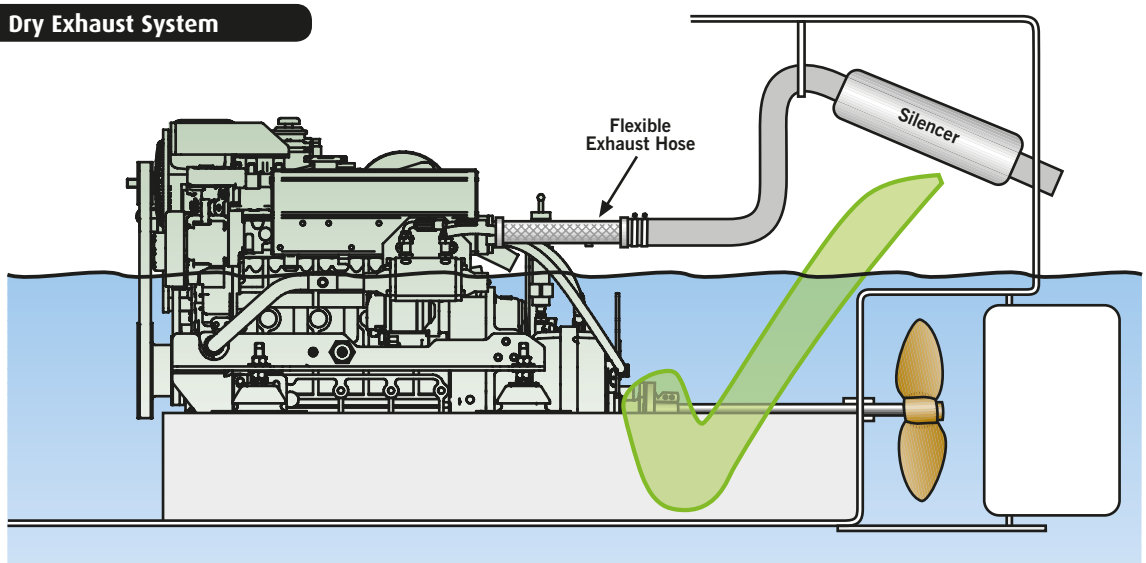

Ensure exhaust raises then falls to outlet

FUEL SUPPLY & LEAK OFF

26 Fuel Supply and Leak Off

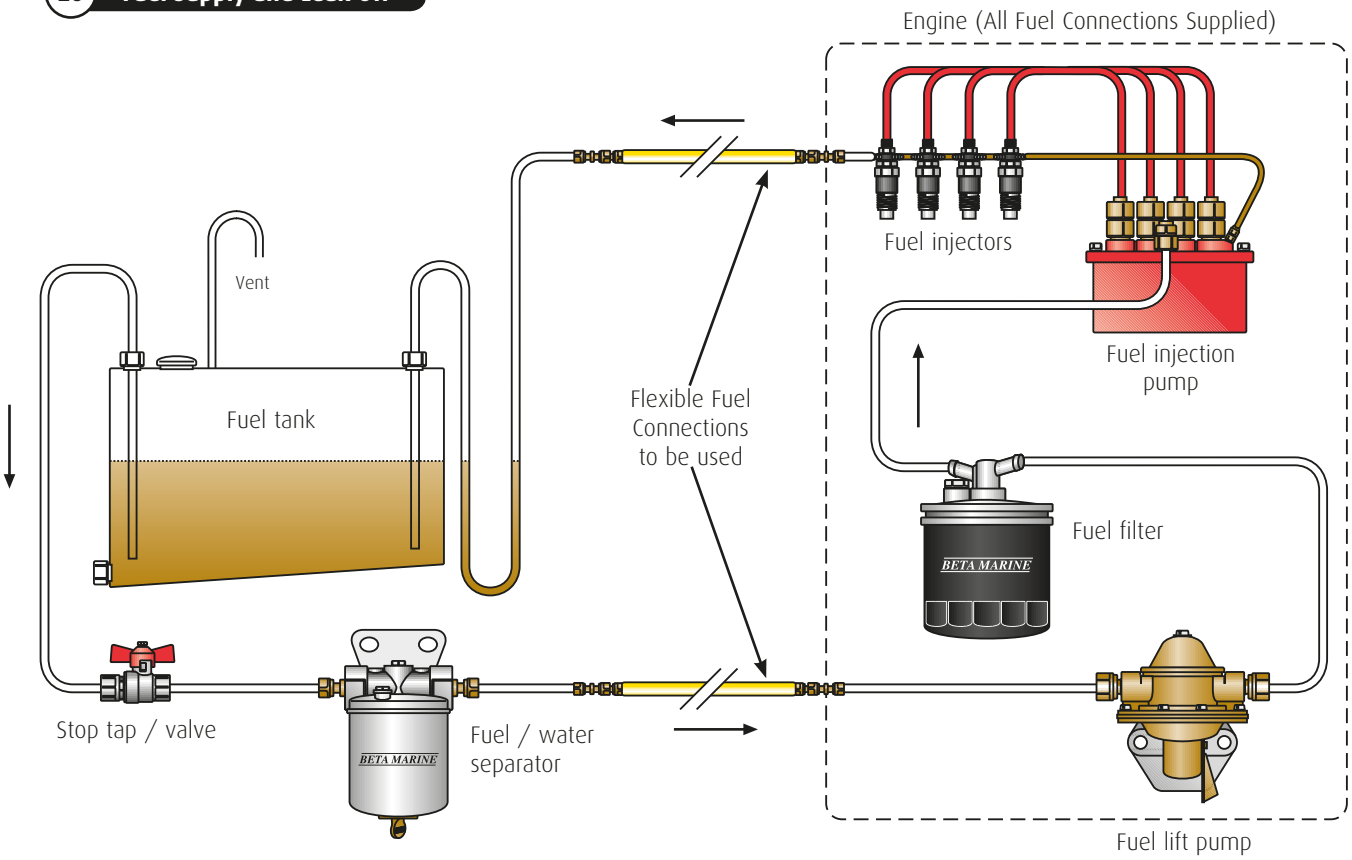

NOTES:

1. **A fuel / water separator must be installed.**
2. The mechanical fuel lift pump is fitted to all engines as standard, but if a suction head of 0.25m or more is required, then an electric fuel lift pump must be fitted (ask your dealer or Beta Marine).
3. It is very important that the excess fuel from the injectors is fed back to the fuel tank and not back to any point in the supply line. This will help prevent air getting into the system.
4. The fuel return (leak off) pipe must loop down to be level with the bottom of the tank before it enters the top of the tank – see drawing. This prevents fuel 'drain down'.
5. Fuel lines and hoses connecting the fuel tank to the engine, must be secured, separated and protected from any source of significant heat. The filling, storage, venting, fuel supply arrangements and installation must be designed and installed so as to minimise the risk of fire. When connecting the engine to the fuel supply and return lines, flexible fuel hoses must be used (next to the engine) and must meet the requirements detailed in standard ISO7840:1995/A1:2000 and/or as required by your surveyor / authority.
6. Any fuel leaks in the system when static are likely to cause poor starting and erratic running and must be corrected immediately. These leaks will allow air to be sucked in when the engine is running.

FUEL & COOLING CONNECTIONS

Engine Connector	Hose O.D.
Fuel supply and leak-off connections are 8 mm conex with olives	8 mm O.D. piping for both, a flexible section is required

CALORIFIER SYSTEM

All Beta engines can be fitted with the calorifier connections to allow the coolant from the closed circuit cooling system to circulate through a calorifier tank, which in turn heats up domestic water. Calorifier connections on this range of engine are shown.

1. The big problem with a calorifier is to remove all the air from the system. If this is not achieved then they don't work!
2. Try and keep the supply and return pipes either horizontal or sloping down in a continuous fall towards the calorifier. This avoids air pockets being created.
3. Extra care must be taken when first connecting the calorifier circuit system to the engine as the coolant level in the heat exchanger may appear to be full but it soon disappears into the calorifier pipe work. Run the engine off load for 10 minutes then check the level as described in 'Filling The Fresh Water System'. Also check to see if the pipe going to the calorifier is getting warm. Top up the water level as required and run for another ten minutes then repeat.
4. If the water level is steady but no warm water is getting to the Calorifier then (with engine stopped) very carefully remove the pressure/filler cap using a large rag/cloth to protect you hand from scalding. Now very carefully open the Calorifier bleed valve (see manufacturers instructions) or if none is provided then very carefully loosen the jubilee clip securing the supply pipe to the Calorifier. Air should escape. Refasten securely when no further bubbles are seen.
5. If the calorifier tank is fitted above the heat exchanger / header tank then you will need to fit a remote header tank slightly above the calorifier tank.

27 Heat Exchanger Calorifier System

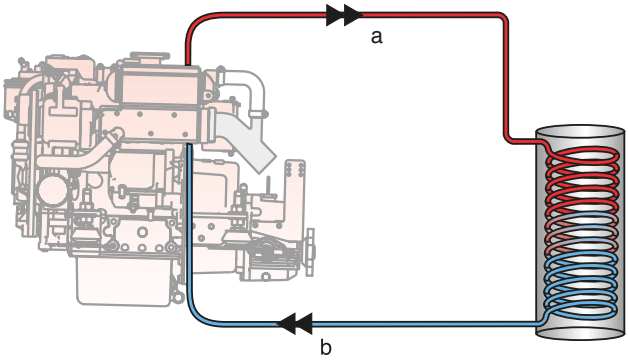

28 Heat Exchanger Calorifier System

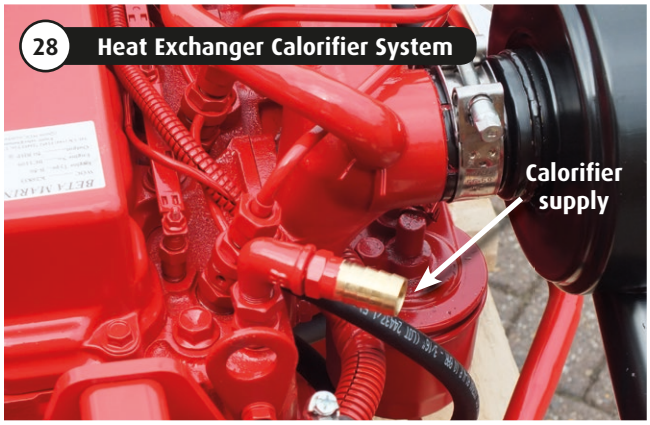

29 Heat Exchanger Calorifier System

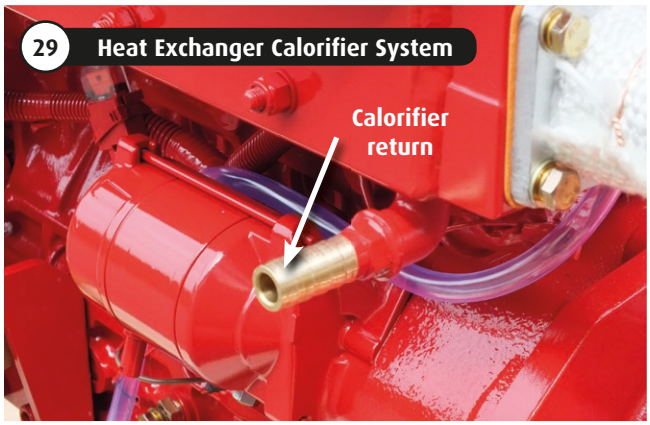

⚠ CAUTION:

TO AVOID PERSONAL INJURY!

Do not do this when the engine is hot as scalding hot water may be forced out of the pipe under pressure.

BOATS WITH KEEL COOLING

Keel cooling 'skin' tanks are normally welded into the 'swim' of the narrowboat. They use the hulls' 8mm steel plate as one side of the keel cooling tank that transfers the engine heat into the canal water. The larger the engine / horse power the larger the 'skin' tank surface area that is required for keel cooling our engines. Keel cooling pipes under the hull of yachts or work boats, that achieve the same surface area can also be used.

Generally the keel cooling tank should have a surface area that is exposed to the canal or sea water of:
0.25 x the hp of the engine = the square feet of cooling tank area required (for steel hulls).

Engine	B43	B50	B60
Steel Tanks (Ft^2)	10.8	12.5	15.5
Steel Tanks (M^2)	1.00	1.16	1.43

The ideal keel cooling tank should:

a) Efficient keel cooling tanks are side mounted, as detailed in the illustration.

b) The rubber hoses connecting the engine to the keel cooling tanks should be designed and manufactured as hot water heater hoses suitable for operation up to 100°C.

c) The 'baffle' must be continuously welded to the outer skin and to one end as shown, and should be close to the inner skin.

Engine	B43 - B60
Supply & Return Pipe	28mm
Baffle Gap Minimum	40mm
Baffle Gap Maximum	85mm

d) The tank should be thin in section (C = 30mm to 40mm) as it is the heat transfer to the canal or river water that is important.

e) The engine coolant for keel cooling (is the same 50:50 ratio of fresh water / antifreeze solution as heat exchanger cooling) and flows around the engine, then the keel cooling tanks, before returning to the engine.

f) The keel cooling tank must have air bleed valves fitted on the top at both ends of the tank.

g) The hot water feed enters at the top of the tank and the colder engine return comes out of the bottom.

Note: If your boat has a hydraulic drive, you will need to increase the surface area of the keel cooling tanks by approximately 30% percent. If you have any questions about keel cooling please refer to our design guidelines detailed on our website, or ask us.

30 Ideal Keel Cooling Tank

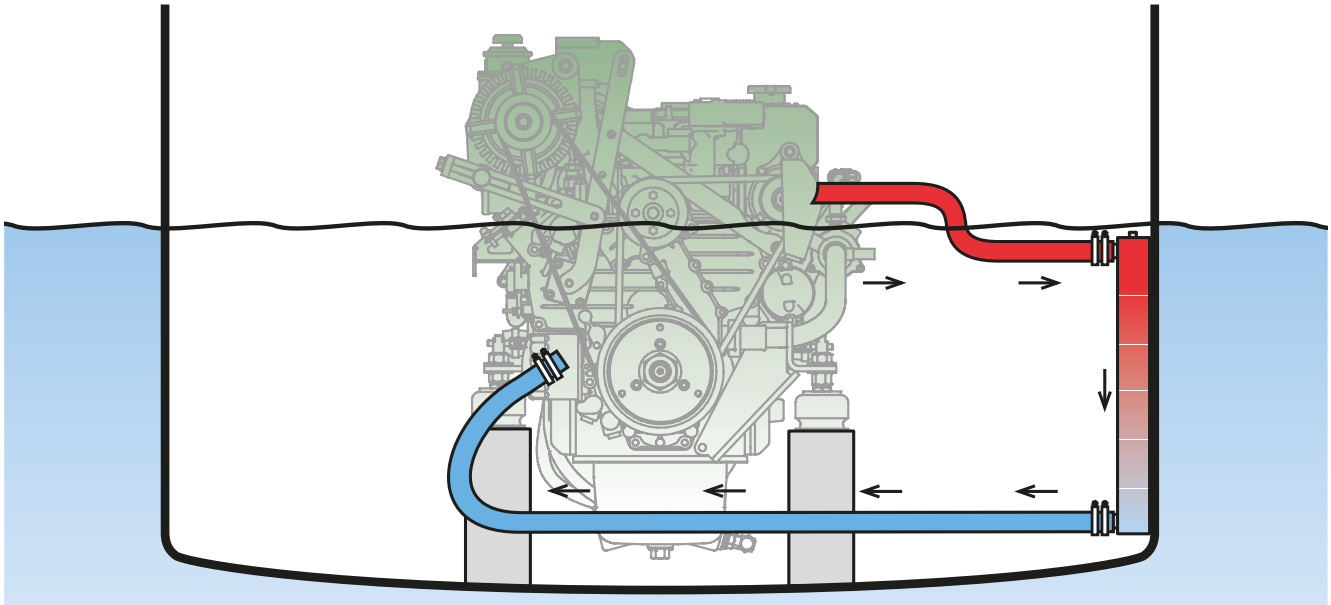

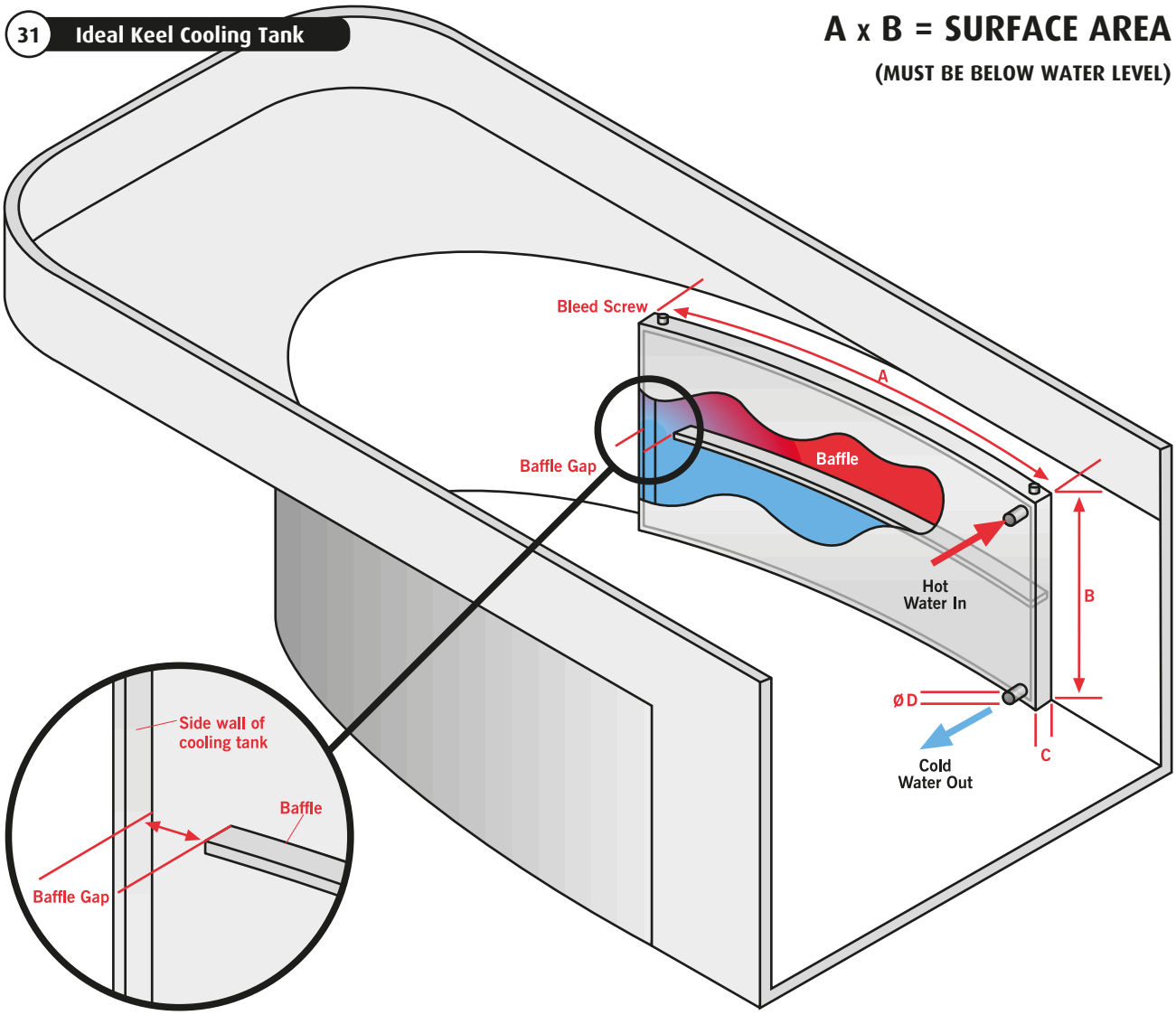

ELECTRICAL INSTALLATIONS

All our engines are supplied with 12 volt electric starting as standard. We therefore supply the main components: starter motor, battery charging alternator, fuel control solenoid, glow plugs, engine temperature sensor, oil pressure sensor, control panel and a wiring loom connecting everything together. We do **not** supply as standard either the starter batteries or battery cables.

CONTROL PANELS

Heat Exchanger Cooled - We offer 5 control panels: the ABV is standard and the A, ABVW, B, C and D are optional. The engine harness is common to all. With our **Keel Cooled** Canal range the AB panel is standard or the 'C' panel is optional.

1. Control Panels must be fitted in a location where the helmsman can either see or hear the alarm system.
2. Our control panels are supplied as standard with a 3 metre multi-core cable for connection to the engine wiring loom. As an optional extra, Beta can provide various lengths of extension looms for runs of 5m or more, and this kit includes a start relay to overcome the voltage drop. (See drawing 300-58520).
3. For standard wiring diagrams see back of manual.
4. All electrical equipment must be protected from sea water. Sea water or rust in the starter motor will invalidate the warranty. Care must be taken when pushing the two halves of the plug together to ensure that individual pins do not fall out. To prevent corrosion and assist in assembly we recommend that the plug is packed with petroleum jelly (Vaseline) and then carefully pushed together. The plastic boots should cover both halves and overlap. A cable tie is then put

to hold the two halves in position and help prevent any ingression of water.

5. The control panels must not be installed where sea water spray can get at them. We recommend that a suitable flap or cover is fitted.
6. All cables must be adequately clipped and protected from abrasion.
7. Electrical systems shall be designed and installed so as to ensure proper operation of the craft under normal conditions of use and shall be such as to minimise risk of fire and electric shock.
8. Attention shall be paid to the provision of overload and short circuit protection of all circuits, except engine starting circuits, supplied from batteries.
9. Ventilation must be provided to prevent the accumulation of gases, which might be emitted from batteries. Batteries shall be firmly secured and protected from ingress of water.

BATTERY CHARGING

For efficient charging of the batteries we recommend setting the engine to a minimum of 1,200 RPM.

This also applies for A.C generation through an inverter.

Charging below 1,200 RPM risks damage.

32

BETA MARINE

IMPORTANT

When battery charging and/or generation AC the engine must be run at 1200rpm

OTHERWISE DAMAGE MAY OCCUR

BATTERY INSTALLATIONS - SOME CONSIDERATIONS

Starter batteries and battery cables are a major consideration for engine starting systems. Incorrect selection of both battery and cables is a major cause of starting failure.

BATTERIES

1. Battery sizes: These should never be of less capacity than the maker's recommendation. If in doubt – ask.
2. In extreme conditions, low temperatures, battery capacity needs to be increased as performance will decrease. This needs to be allowed for during selection of a battery.
3. Battery terminals and connections must always be kept clean, in good condition and tight. Faulty connections can lead to poor performance and even (in extreme conditions) explosion.
4. Batteries must be in good condition and must hold voltage. An idle standing battery would be expected to be at least 12.6 volts and we would like to see at least 12v on the starter motor terminals.
5. Charging circuits must be sufficient for the battery system used. In other words make sure you have enough battery capacity but bear in mind the recharge capability. Depending upon the battery type the recharge voltage will be in the region of 14.7 volts.

BATTERY CABLES

1. Starter batteries should be as close to the engine as practically possible. The reason for this is to ensure that the maximum voltage from the battery is available to the starter motor. The longer the cable run - the more will be the voltage drop. This is due to the resistance of the cables.
2. Generally speaking for smaller engines we recommend battery cables of 25mm2 conductor cross sectional area with length up to 1.5m per cable. That equals a cable run of 3m total which would have a voltage drop in the region of 0.8v if the starter motor was using 160 amps when motoring. Battery cables that are too small will overheat and their insulation could catch fire.
3. When the supply is switched on to the starter motor there will be a massive inrush of power in the region of 5 times the motoring current. The battery will be expected to supply this inrush and then recover sufficiently to give the motoring current (often called the 'rolling' or 'cranking' current).

   If the correct battery is selected but the engine will not crank at sufficient speed after the inrush then (assuming battery cables are the correct size) the battery is either discharged or faulty.
4. If the voltage at the starter motor terminals after the inrush is not at least 10.5 volts it is likely that the motor will either crawl at insufficient speed or not turn at all. Battery cables could overheat.
5. Battery cables are sized on the motoring or rolling current of the starter motor and the length of battery cable run. This length is the total distance of both the positive and negative cables added together. Under normal circumstances the voltage drop in the starter battery cable circuit should not exceed 0.8 volt and in any circuit should not exceed 1.2 volts.
6. Please note that cranking time should be no longer than 10 seconds with at least a 10 second rest between attempts.

25mm^2 Cable

Engine	Cranking Amps	Cable Volt drop*	Max length, both cables added together
Up to Beta 38	100	0.0017V	4.7m
Up to Beta 50	120	0.0017V	3.9m
Up to Beta 60	170	0.0017V	2.8m
Up to Beta 105	210 / 250**	0.0017V	Not suitable
Beta 150	333	0.0017V	Not suitable

35mm^2 Cable

Engine	Cranking Amps	Cable Volt drop*	Max length, both cables added together
Up to Beta 38	100	0.0013V	6.2m
Up to Beta 50	120	0.0013V	5.2m
Up to Beta 60	170	0.0013V	3.6m
Up to Beta 105	210 / 250**	0.0013V	2.5m
Beta 150	333	0.0013V	1.8m (70mm^2 cable preferred)

70mm^2 Cable

Engine	Cranking Amps	Cable Volt drop*	Max length, both cables added together
Up to Beta 38	100	0.00063V	12.7m
Up to Beta 50	120	0.00063V	10.5m
Up to Beta 60	170	0.00063V	7.5m
Up to Beta 105	210 / 250**	0.00063V	5.0m
Beta 150	333	0.00063V	3.8m

* Voltage drops for pvc insulated cables are ex table 9D1 of the IEE Wiring Regulations.
** Varies between models and builds.

The above tables are based on a maximum conductor temperature of 70°C in an ambient temperature of 30°C.

KEYSWITCH TERMINATIONS

The standard panel keyswitch can be used to tap off a switched positive ignition feed to power additional gauges. In this way these gauges will only be live whilst the engine is running, the engine is starting or the heaters are being used.

For silver keyswitches, the terminal to achieve this ignition switched positive is marked 'AC'.

For panels without any keyswitch, gauges can be driven from the 1mm^2 brown wire which terminates at 11 way connector terminal 4. This is a lower power switched positive, any additional power required from this connection must be feed through a relay, as noted below.

Note: these keyswitch terminals are rated at 10 amps maximum, since they are already utilised for panel and alternator feeds Beta Marine recommend any additional requirements from these terminals must be fed through a relay. This relay should then be connected to it's own fused positive supply directly from the engine battery.

Please refer to page 61 for an illustration of a typical electric fuel lift pump with ignition switched relay.

Section 2

GUIDELINES FOR OPERATION OF ENGINE

IMPORTANT!

CHECKS PRIOR TO INITIAL USE

1. Generally, a new engine has the oil and anti-freeze removed after the works test. Fill the engine with the correct oil and antifreeze (see sections on Engine oil and Cooling). **Check gearbox oil level** - see gearbox 'Owners Hand Book'.
2. Ensure the engine is free to turn without obstructions.
3. Ensure battery is fully charged and connected with the battery isolator in the 'ON' position.
4. Ensure "Morse" speed and gearbox cables are fitted correctly and that cable travel lengths are correct.

   Gear selection lever - all mechanical gearboxes: care must be taken to ensure that the remote control cable is adjusted so that the selector lever on the gearbox moves **full** travel and is brought "hard up" against its end stop in both directions.

   Failure to achieve the correct adjustment will reduce efficiency of the clutch and may cause slippage at low revs. Warranty will not be accepted on gearboxes returned in the warranty period for failure due to incorrect adjustment.
5. Open the sea water cock - carefully checking there are no water leaks.
6. **Bleeding the fuel system for initial start up.**

a) The fuel system must have all the trapped air carefully 'bled' out; starting at the fuel tank and progressively working through to: the fuel/water trap, the fuel filter, to the fuel injection pump.

b) Open the fuel tank stop tap/valve and then bleed the fuel/water separator of air as shown in manufacturer's literature.

c) Fuel should now arrive at the fuel lift pump.

d) Open the fuel bleed screw on top of the fuel filter by 1 to 2 turns, see photo 33.

e) Move the hand priming lever on fuel lift pump up and down (photo 33) until fuel with "no bubbles" comes out of the fuel filter bleed screw (photo 34). The hand priming lever normally has about 90° travel; **but the camshaft lobe may block this travel requiring you to rotate the engine 90° to obtain full travel.**

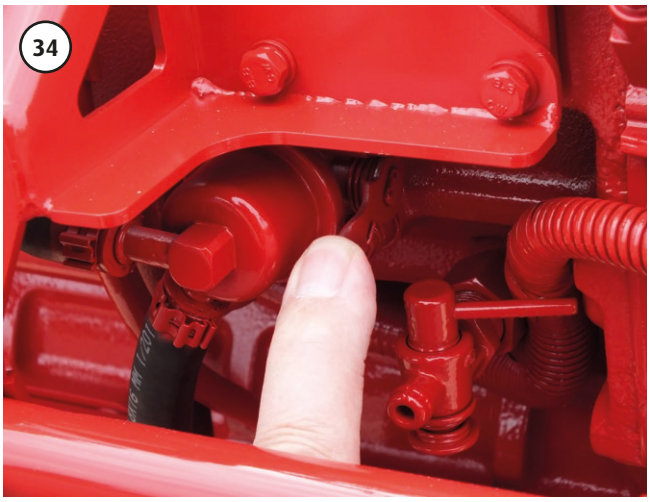

f) Shut/tighten the bleed screw.

g) Open the bleed screw on the fuel injection pump and again 'bleed' through to the injection pump. Continue to hand prime for 30 seconds to push fuel and any remaining air through the fuel pump. Clean all areas thoroughly of fuel with tissue paper.

7. Ensure engine is **out of gear** and set to $^1/_3$ throttle - see "single lever control" instructions/manual.

8. Start engine (see normal starting). Note the engine may have to be turned over with the starter for a few seconds before it fires.

   Do not run the starter for more than 20 seconds. If the engine has not started after 20 seconds there is probably still air in the fuel system; disengage the starter and continue to hand prime the engine with the fuel lift pump lever for a further 30 seconds, then repeat.

   If engine does not start after 3 attempts then allow 5 minutes for the starter to cool down before repeating 6 (c) to 8.

   Note: The starter motor windings can be burnt out with continuous cranking.

9. If the engine does not easily start at the first or second attempt, do not over crank the engine with the seawater inlet seacock turned 'on'. (This problem may have been caused by air in the fuel system, running out of fuel, or changing a fuel filter, etc).

   You should close / shut off the seawater inlet seacock to stop seawater being pumped into the exhaust system and eventually filling up the combustion chamber, causing severe damage.

   When you have resolved the problem, and the engine starts you must **immediately** open the seacock.

⚠ CAUTION:

TO AVOID PERSONAL INJURY!

- Do not bleed a hot engine as this could cause fuel to spill onto a hot exhaust manifold creating a fire.
- Do not mix petrol / gasoline or alcohol with diesel fuel. This mixture can cause an explosion.
- Do not get diesel fuel or oil on the flexible mounts - they will deteriorate rapidly if soaked in these.
- Fuel must be removed from skin to prevent infection.

NORMAL STARTING

BETA CONTROL PANELS - ABV, A, AB, B AND C DELUXE - WITH KEYSWITCH.

To operate the engine: with the engine out of gear, set speed control lever to $^1/_3$ throttle.

1. Turn key anti-clockwise to 'HEAT' position and hold for fifteen seconds maximum.
2. Turn key clockwise to 'RUN' position. At this stage the instrument panel should illuminate:
   - Red lamp for 'low oil pressure' should illuminate.
   - Red lamp for 'high engine temperature' should not illuminate (when engine is cold / cool / warm). This lamp will only ever illuminate if the engine is over temperature.
   - Red lamp for 'no starter battery charge' should illuminate.
   - Red lamp for 'no domestic battery charge'. **Only fitted with panels AB and C and will illuminate only if 2nd 'domestic' alternator is fitted.**
   - Green lamp for panel 'power on' should illuminate.
   - Buzzer should sound.
3. Turn to 'START' position and engine will motor, hold in position until engine fires (see initial start-up section for maximum time starter can be used).
4. Release key (when engine has started) to 'RUN' position.
   - All red warning lamps should extinguish and buzzer should stop sounding. The oil pressure lamp may take a few seconds to switch off and the charge fail lamp may remain on until engine rpm is increased to approximately 1,000 rpm if the engine was started on tickover.
   - Green lamp for 'panel power on' should still function.
   - If the 'charge fail' lamp remains on then "blip" the engine speed up to 2000 rev/min and it will go out (split charge relay drain).
5. Run the engine on fast tickover (1500 rpm) for it to warm-up.

BETA CONTROL PANEL ABVW - KEYLESS (WITHOUT KEYSWITCH)

This panel controls the engine with three water resistant push buttons instead of a keyswitch, and is less prone to damage and corrosion from sea water spray.

To operate the engine: with the engine out of gear, set speed control lever to 1/3 throttle.

1. Press and hold 'HEAT' button for fifteen seconds maximum.
   - Red lamp for 'no starter battery charge' should illuminate.
   - Red lamp for 'high engine temperature' should not illuminate (when engine is cold / cool / warm). This lamp will only ever illuminate if the engine is over temperature.
   - Red lamp for 'low oil pressure' should illuminate.
   - Green lamp for panel 'power on' should illuminate.
   - Buzzer should sound.
2. Press 'START' button and hold in position until engine fires (see initial start-up section for maximum time starter can be operated). Release button (when engine has started)
   - All red warning lamps should extinguish and buzzer should stop sounding. The oil pressure lamp may take a few seconds to switch off and the charge fail lamp may remain on until engine rpm is increased to approximately 1,000rpm if the engine was started on tickover.
   - Green lamp for 'panel power on' should still function.
3. To stop the engine press the 'STOP' push button, hold in until engine stops. This button also switches the power off to the gauges, engine and 'power on' lamp.
4. To re-start the engine, simply repeat steps from '1' above, there is no need to switch battery isolators off whilst remaining on board.
5. If leaving the boat, isolate start battery from engine and panel, to prevent accidental start up of engine and stop power leakage.

STOPPING

Every propulsion engine is fitted with a stop solenoid. To stop the engine simply press stop push button, hold in until engine stops, then turn key from 'RUN' to 'OFF' position. Do not turn the key to the off position when the engine is running, this will not allow the alternator to charge the battery.

WARNING!

DO NOT leave the key in the 'OFF' position when engine is running. This will not allow the alternator to charge and will damage the alternator.

DO NOT leave the key in 'HEAT' position for more than 15 seconds - this will damage the heater / glow plugs and eventually lead to poor starting.

When leaving the boat for an extended period:

- Turn off sea-cock (heat exchanger cooled engines).
- Turn off battery isolator.

DO NOT depress the stop button for more than ten seconds as this will lead to overheating and failure of the solenoid.

These engines are equipped with a mechanical stop lever in the event of electrical system failure. This lever is located on the starboard side of the engine below the speed control lever. See illustration below. Move the stop lever aft to stop the engine then return it to the run position.

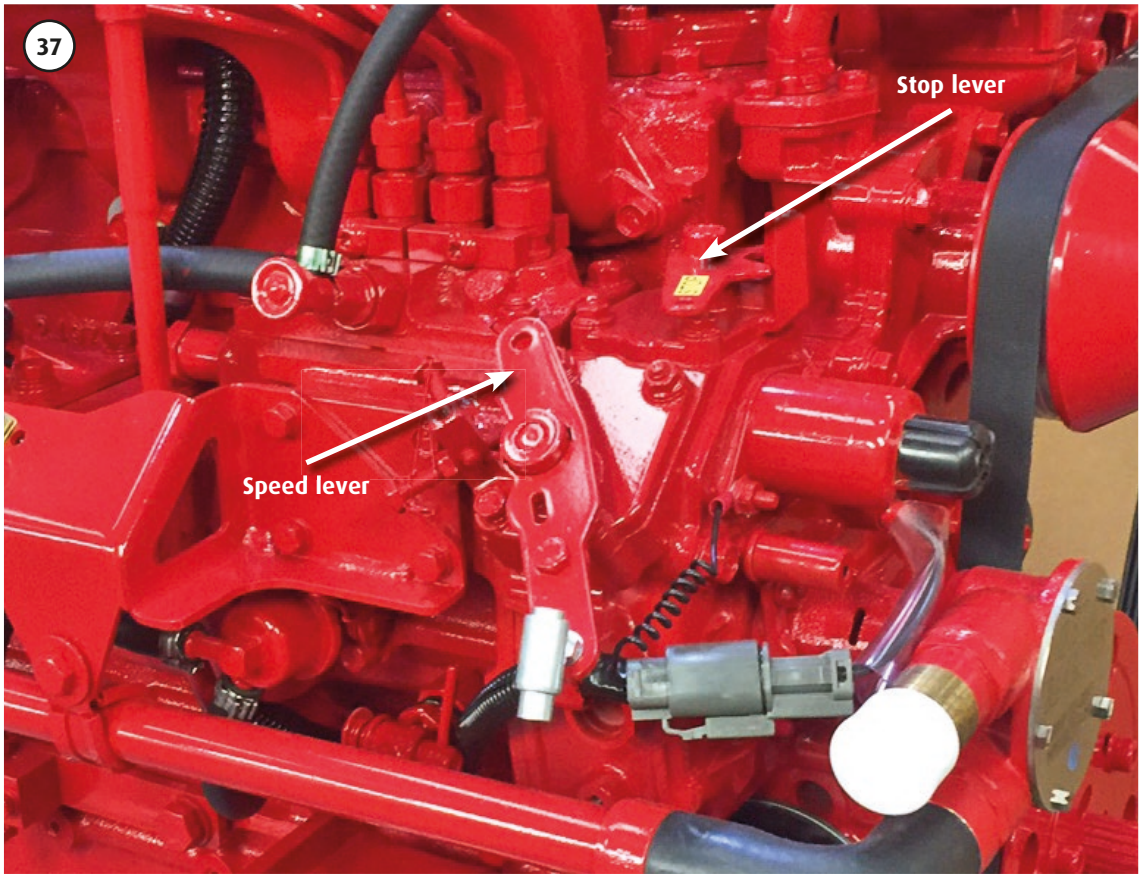

Section 3

MAINTENANCE SCHEDULE

DAILY OR EVERY 8 HOURS RUNNING

- Check engine oil level.
- Check gearbox oil level.
- Check coolant level.
- Check battery fluid.
- Check belt tension and alternator bolts.
- Ensure raw water inlet strainer is clear.
- Check stern gland lubrication if used.
- Drain off any water in fuel/water separator.

AFTER THE FIRST 25 HOURS RUNNING

- Change gearbox lubricant (See separate gearbox manual).
- Check that all external nuts, bolts and fastenings are tight. See table for torque values. **Do NOT over tighten.** Special attention should be paid to the flexible mount lock nuts, these should be checked for tightness, starting with lower nut first in each case. If the lower nuts are found to be very loose, then the alignment of the shaft to the gearbox half coupling should be re-checked. Poor alignment due to loose flexible mount nuts will cause excessive vibration and knocking.
- Check and adjust all drive belt tensions, see page 41.
- Check ball joint nyloc nuts for tightness on both gearbox and speed control levers. Grease both fittings all over.

AFTER FIRST 50 HOURS

- Change engine lubricating oil.
- Change oil filter.
- Check for leaks on header tank tubestack. Tighten end cap bolt if required.
- Drain off any water in fuel/water separator.

AFTER 150 HOURS

- If shallow sump (option) is fitted, change engine lubricating oil and filter.

EVERY YEAR OR 250 HOURS IF SOONER

- Change engine lubricating oil (standard sump)
- Change lubricating oil filter
- Check air cleaner element
- Check sea water pump impeller and change if worn.
- Check wasting anode condition, replace when necessary. In some environments this may be six monthly or less.
- Remove heat exchanger tube stack, by undoing the bolt each end of the tube stack. Remove end cover, pull out tube stack and clean. Replace rubber 'O' rings and re-assemble. Top up with antifreeze. Immediately engine is started check for leaks.
- Spray the key switch with WD40 or equivalent to lubricate the barrel.
- Check that all external nuts, bolts and fastenings are tight. See table for torque values.
- Check ball joint nyloc nuts for tightness on both gearbox and speed control levers.

EVERY 750 HOURS (IN ADDITION TO 250 HOURS MAINTENANCE)

- Change air cleaner element.
- Change fuel filter.
- Change antifreeze.
- Change gearbox oil.
- Check electrical equipment, condition of hoses and belts, replace as necessary.

Maintenance Schedule

	Daily or every 8hr running	After first 25hrs	After first 50hrs	Every 150hrs with shallow sump	Every Year or 250hrs if sooner	Every 750hrs
Check engine oil level	●	●	●	●	●	●
Check gearbox oil level	●	●	●	●	●	●
Check engine coolant level	●	●	●	●	●	●
Check battery fluid	●	●	●	●	●	●
Check belt tension and alternator bolts	●	●	●	●	●	●
Ensaw raw water inlet strainer is clear	●	●	●	●	●	●
Check stern gland lubrication	●	●	●	●	●	●
Drain off any water in fuel / water separator	●	●	●	●	●	●
Change gearbox oil		●	See separate gearbox manual			
Check all external nuts, bolts and fastenings are tight. Check belt tension and alternator bolts. Check for leaks.		●	●		●	●
Change engine oil			●	●	●	●
Change oil filter			●	●	●	●
Lubricate keyswitch on control panel with "vaseline" or WD40			●		●	●
Check coolant "sacrificial" zinc anode and replace if necessary - sometimes frequently			●		●	●
Check general condition			●		●	●
Remove heat exchanger tube stack and **replace** rubber o-rings					●	●
Check sea water pump impeller and **change if worn**					●	●
Check air cleaner element and **change if required**					●	●
Change air cleaner element						●
Change diesel fuel filter						●
Change gearbox oil						●
Drain and **replace** engine coolant / anti-freeze						●

LUBRICATING OILS

Engine oil: Engine oil quality should have the minimum properties of the American Petroleum Institute "API" classification CF (CD and CE have been superseded by CF).

A good quality SAE 15W/40 mineral based multigrade oil as used in most car diesel engines will meet requirements.

An acceptable alternative are mineral based lubricating oils that are sometimes called semi-synthetic (or 'synthetic blends') and are blends of mineral oil with no more than 30% synthetic oil.

The following table gives grades of oil viscosity required for various ambient temperature ranges.

Ambient Temp.	Multi-Grade
-30°C to 0°C	SAE 10W/30
-15°C to +15°C	SAE 15W/40
0°C to +30°C	SAE 15W/40
25°C and above	SAE 15W/40

Note: Do not use lubricant additives, and we do not recommended totally synthetic oil.

CHECKING THE ENGINE OIL LEVEL

For quantities of oil required please page 6. When checking the engine oil level, do so before starting, or more than five minutes after stopping.

1. To check the oil level, draw out the dipstick, wipe it clean, re-insert it, and draw it out again. Check to see that the oil level lies between the two notches.
2. If the level is too low, add new oil to the specified level.

When using an oil of a different make or viscosity from the previous one, drain out the old oil. **Never mix two different types of oil.**

Engine oil should be changed after first 50 hours running time and then every year or every 250 hours if sooner (Shallow sumps are every 150 hours).

Oil filter is a cartridge type mounted on the side of the engine and should be changed when you change the oil.

IMPORTANT! - Do not over fill!

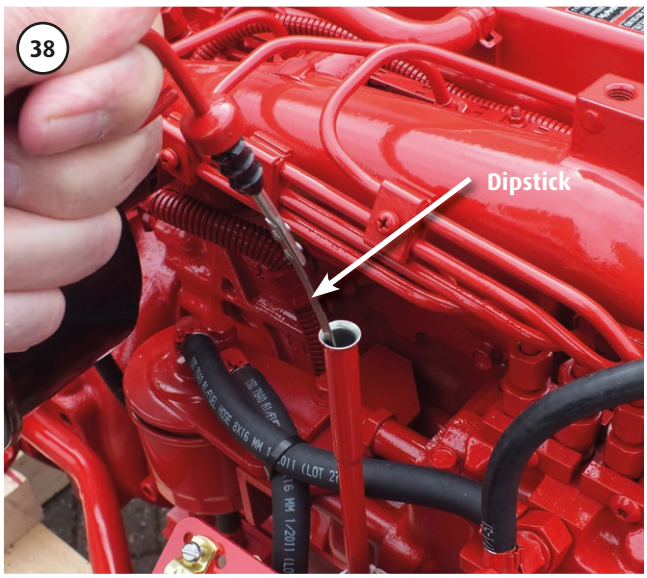

CHANGING THE ENGINE OIL

1. Run the engine for 10 minutes to warm up the oil, then stop it and open the oil filler cap.
2. Your engine is provided with a sump drain pump. Unscrew the end cap on the end of the pump spout, turn the tap to 'on'. Use the hand pump as shown to pump out the oil into a bucket. Turn the tap to off position and replace end cap. See photo 40.
3. Unscrew the oil filter and replace with a new one. See photo 41.

   Note: It is best to have a plastic bag wrapped round the filter to catch any oil left in the system. (Always keep your bilges clean!) Before screwing in the new filter spread a thin film of oil round the rubber gasket to ensure a good seal and screw in - hand tight.
4. Fill the engine with new oil as described on the previous page and replace the oil filter cap.
5. Run the engine and check for oil leaks.

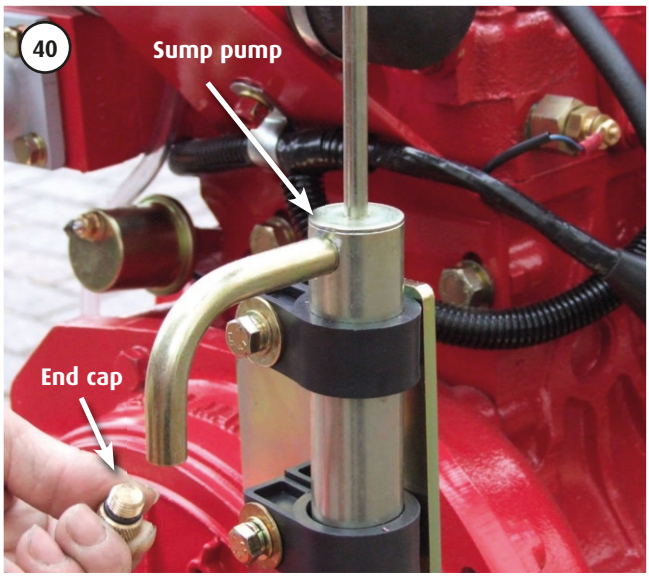

CHECKING THE GEARBOX OIL LEVEL

1. The gearbox is fitted with a dipstick and oil filler plug, see photo 42.
2. Each engine is supplied with a gearbox 'operators manual' which specifies the type of lubricating oil to be used, the capacity and frequency of changing of the oil.
3. New engines are normally supplied with the gearbox topped up with lubricant but **check the level before starting the engine for the first time**.
4. The oil can be changed via the drain plug at the bottom of the box or sucked out with a hand pump via the filler plug.
5. A guide to the type of oil to be used is as follows:

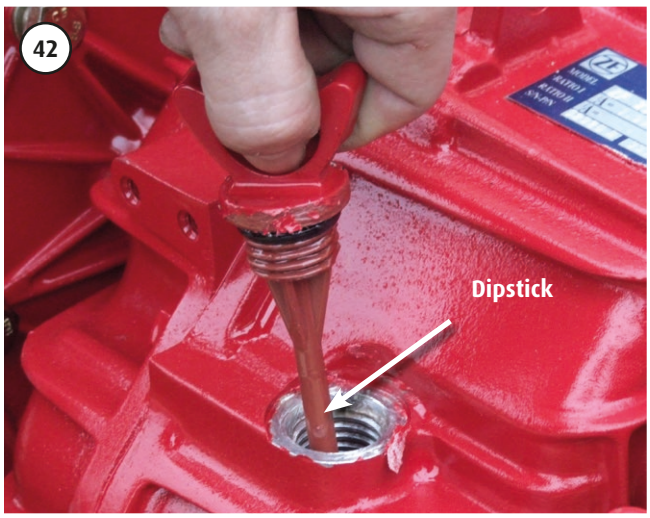

Gearbox	Lubricant	Capacity (approx.)
TMC40	ATF	0.2 L
TMC60/A	ATF	0.8 L
TMC260	ATF	1.2 L
TM345/A	Oil	1.6 L
TM93/A	Oil	2.4 L
TM170/A	Oil	2.8 L

Gearbox	Lubricant	Capacity (approx.)
ZF 25/A	ATF	1.8 L
ZF 45/A	ATF	2.5 L
ZF 15 MIV	ATF	1.0 L
ZF 63 IV	ATF	4.0 L

Gearbox	Lubricant	Capacity (approx.)
PRM 80	ATF	0.6 L
PRM 120	ATF	0.8 L
PRM 150	Oil	1.4 L
PRM 260	Oil	1.5 L
PRM 500	Oil	2.5 L
PRM 750	Oil	2.5 to 3.5 L
PRM 1000	Oil	3.0 to 4.0 L

Note: ATF is Automatic Transmission Fluid.

For additional information please see manufacturers websites:

PRM: www.prm-marine.com
Technodrive: www.twindisc.com
ZF: www.zf.com

Note: Over-filling your engine with oil can be as detrimental as under-filling.

CHANGING THE GEARBOX OIL

1. Run the gearbox for 10 minutes to warm up the oil.
2. Switch off the engine, remove the dipstick and begin to drain oil from the gearbox and cooling system. The drain plug is located on rear right hand side of the gearbox on most models.
3. Allow to drain, before refilling the gearbox with new oil as recommended.
4. Run the engine to allow oil to circulate, then stop and allow the oil to settle. Re-check the oil level and top up if necessary.
5. Ensure dipstick and cap are firmly secured and check for oil leaks, especially around the output shaft oil seal and gasket sealing surfaces.

FUEL SYSTEM

IMPORTANT!

- Always fit a fuel/water separator in the fuel supply system. **Water in the fuel can seriously damage the injection system**.
- If a fuel supply shutoff valve is fitted do not use a taper tap, only use a ball valve tap. The ball valve type are more reliable and less likely to let air into the fuel system.
- Be sure to use a strainer when filling the fuel tank. Dirt or sand in the fuel may cause trouble in the fuel injection pump.
- Always use diesel fuel. **Do not use paraffin / kerosene**, as this has a low cetane rating and adversely affects the engine.
- Bio-diesel fuel can be added to the normal diesel fuel up to a maximum limit of 7% without affecting the warranty.
- Most diesel fuels now contain up to a maximum limit of 7% Biodiesel and this does not affect the engine warranty. The recent changes to fuel specifications allow the addition of FAME (fatty acid methyl ester) biodiesel EN14214:2009, to diesel fuel, but please be aware that biodiesel does allow bacteria to grow more easily in the fuel and this can clog your fuel tank, pipes and filters. If you experience an outbreak of bacterial growth you can either empty and clean out your fuel pipes and tank, or use biocide additives and filtering.
- Low sulphur diesel fuel - regulations changed recently reducing the sulphur content by 99%, in many countries. The European standard is EN590:2009, and in the USA ASTM D975-09. The engine is designed to run on low sulphur fuel, and this is now preferred.
- We know that some customers are using 100% Biodiesel fuel, if you use a higher percentage of Bio-diesel fuel you must fit an electric lift pump into the fuel supply line, and the fuel filter and oil filter must both be changed together when the oil filter is normally replaced.

IMPORTANT!

Beta Marine warranty will not cover fuel equipment when more than 7% Biodiesel is used.

- Be careful not to let the fuel tank become empty, or air can enter the fuel system, necessitating bleeding before next engine start.
- The fuel lift pump will only lift fuel through 0.25m. If this is insufficient then an electric fuel lift pump must be fitted. Drawing 202-06421, illustrating recommended wiring for this pump can be supplied upon request.

FUEL FILTER REPLACEMENT

1. The fuel filter is a spin on type. Remove by turning anti-clockwise when viewed from below.
2. Replace the fuel filter cartridge every 750 hours or every 2 years. See photo 43.
3. Apply fuel oil thinly over the gasket and tighten into position - hand tight.
4. Bleed as detailed - see 'initial start up'.
5. Check for leaks.
6. Do not get fuel on the flexible mounts, this will degrade and damage the rubber.

HEAT EXCHANGER COOLING

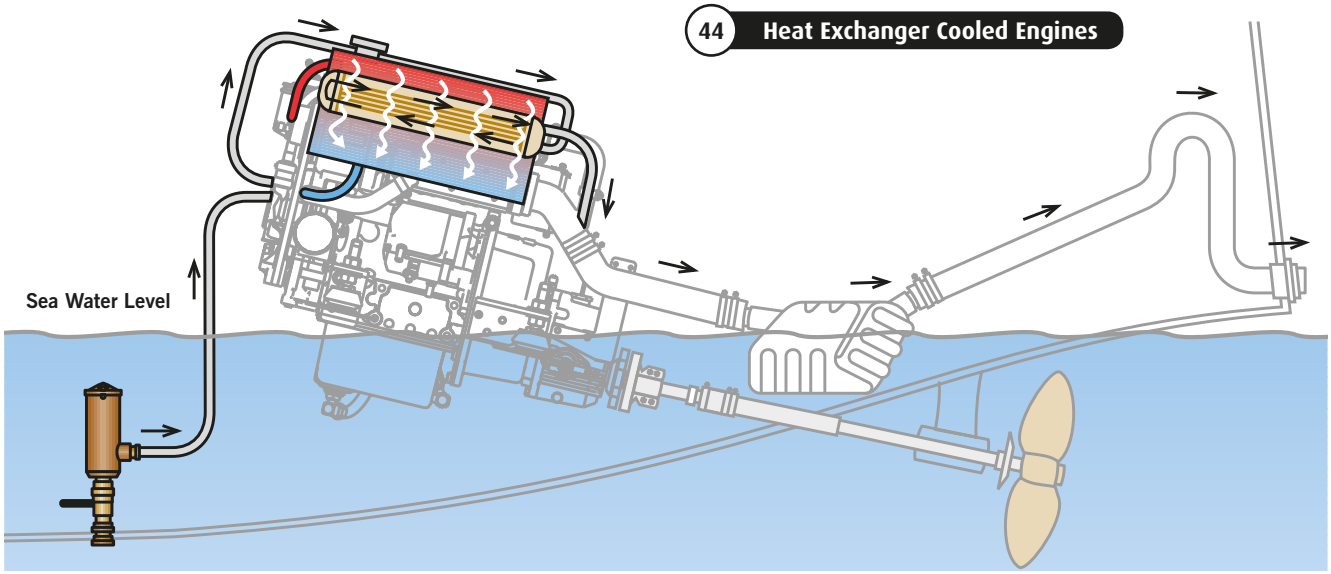

All diesel engines require a cooling system. Generally all modern seagoing boats with wooden or GRP (Glass Reinforced Polyester) hulls normally have a Heat Exchanger 'Fresh Water' cooling system.

Heat Exchanger cooling takes in sea water through the bottom of the hull via a seacock usually with a strainer, to the seawater pump mounted on the engine. The seawater is pumped through piping to the heat exchanger where it passes through the cupronickel 'tubestack'; first though the bottom pipes, then back through the top pipes and then out into the exhaust injection bend. From the injection bend the seawater falls into the waterlock and is then blown with the exhaust through a 'gooseneck' and out of the stern of the boat. The engine cooling has a closed circuit that uses a coolant solution of 50% 'Fresh Water' and 50% antifreeze. This coolant circulates round the engine collecting heat and transfers the heat to the seawater in the heat exchanger as it circulates around the outside of the cupronickel 'tubestack' pipes.

A typical heat exchanger cooling system is shown on the inside front cover, and detail drawings are included in the following pages to ensure a reliable installation.

ENGINE 'FRESH WATER' COOLANT

The coolant solution must be a mixture of fresh water and anti-freeze (Ethylene Glycol based conforming to BS6580:1992) with the antifreeze being a 50% solution (this also applies to warm and tropical climates). This not only stops 'freezing up' in winter, but it also prevents overheating and corrosion. The warranty is invalid if the correct percentage / ratio is not used.

The anti-freeze in the fresh water system enables the boiling point of water to rise to 124°C with a 13 psi pressure cap fitted. The water temperature alarm switch will however be activated at 95°C to 100°C. If no anti-freeze or a very weak solution is used, then the water temperature switch may not be activated before coolant is lost.

RAW WATER COOLING - KEEL COOLING

Older marine engine designs have used 'Raw Water' cooling. This is when the seawater circulates directly through the engine cooling circuit and will over time corrode the inside of the engine. Seawater is very corrosive and the salts can also cause scale build-up in narrow coolant passageways. Beta Marine do not offer 'Raw Water' cooling.

Keel Cooling is often used on steel work boats, fishing boats and inland waterway boats where a grid cooler or heat transfer tank are built into the hull to give a closed circuit system. In these applications no seawater pump is used and the engine circulating pump pushed the water / antifreeze solution round the closed system.

FILLING THE FRESH WATER SYSTEM

New engines are supplied with the fresh water 'coolant' drained off. The following instructions must be followed to fill the system.

a) Pour into a clean bucket a mixture of both fresh water and anti-freeze; with an anti-freeze ratio of 50% (see next page). For the required volume see technical specification page 6.

b) Check that the coolant drain tap or plug is turned off. See photo 45.

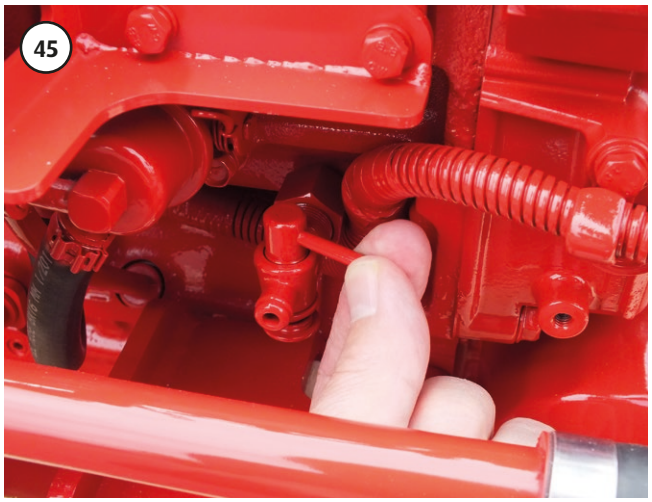

c) Fill engine with freshwater / anti-freeze solution through the top of the heat exchanger or header tank with the filler cap removed. See photo 46.

d) Fill header tank to the top of the filler neck and replace cap. Press down firmly on filler cap and hand tighten in a clockwise direction.

Note: For keel cooled engines a large quantity of coolant (anti-freeze solution) is required depending upon the size of the keel cooling system (refer to builder's instructions).

e) Run the engine for 5 minutes on no load (out of gear) and check coolant level, this will help remove air from the system. Top up as necessary.

f) Check system for leaks.

Note: For keel cooled engines it is very important to bleed all of the air out of the complete cooling system before the engine is run on load (check with builder's instructions).

g) If a calorifier is fitted care must be taken to see that this is also full of coolant and all the air is expelled. (See calorifier fitting notes under Section 1).

h) Run the engine on one third load for 15 minutes, preferably with the boat tied up. As the system warms up coolant may be expelled from the overflow pipe into the bilge. Stop the engine and allow the engine to cool down before removing the pressure cap and top up the coolant to 25 mm / 1" below the filler neck.

⚠ CAUTION:

TO AVOID PERSONAL INJURY!

Removal of the pressure cap when the engine is hot can cause severe injury from scalding hot water under pressure. Always allow the engine to cool and then use a large cloth when turning the cap anti-clockwise to the stop. This allows the pressure to be released. Press firmly down on the cap and continue to turn anticlockwise to release the cap.

i) Repeat (h) if coolant level is more than 1 inch below the base of the filler neck when the engine has cooled down.

j) Run engine on $^{2}/_{3}$ full load for 20 minutes, check for leaks and repeat (i).

k) Anti-freeze solutions should be drained off every 2 years and replaced with a new solution.

Note: When draining fresh water system, ensure the engine has cooled sufficiently to prevent scalding from hot pressurised water. Prior to draining a cold engine, remove the filler cap from the header tank and then open the water drain tap. This allows the water to drain freely from the system.

FRESH WATER EXPANSION TANK KITS

Fresh Water Expansion Tank Kits are available as optional extra`s, individual drawing and price available upon request.

SEA WATER PUMP AND COOLING SYSTEM

IMPORTANT!

Before working on the sea water system ensure that the **sea cock is in the off position!**

1. It is very important that the correct sea water flow is maintained to cool the closed circuit system of the engine. The key component in this system is the sea water pump impeller. This should be checked every year by removing the circular plate. See photo 48.
2. Withdraw the rubber impeller from its drive shaft as shown. See photo 49. Pliers may be required.
3. Check impeller for cracks in the rubber, excessive wear or lost vanes. Replace with a new impeller as necessary. A drop of washing up liquid on the impeller will help to push it into position.
4. Make sure the impeller blades are bent the right way relative to the rotation of the impeller shaft.

Note: If any pieces of rubber impeller are missing then they must be found as they are most likely to be trapped in the entrance to the heat exchanger cooling stack. See 'Cleaning Tube Stack'.

5. Run the engine up to temperature to check for leaks.

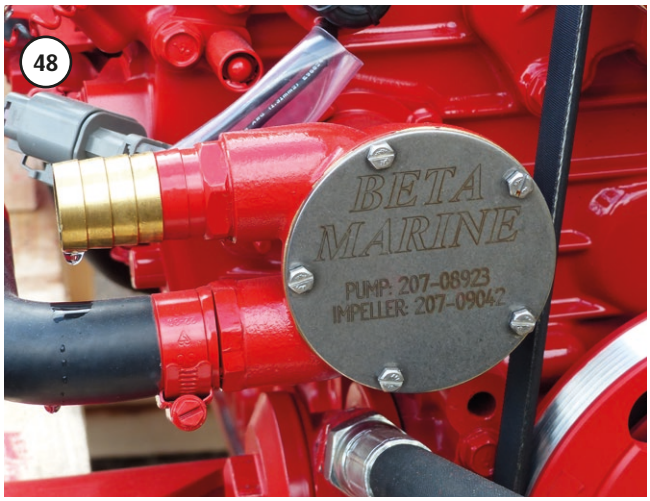

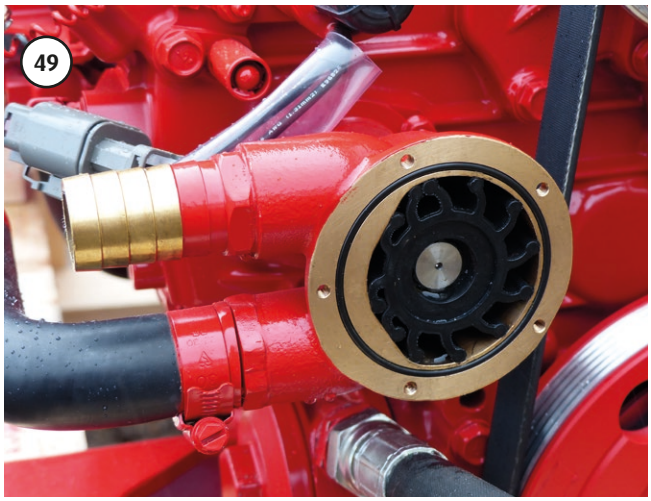

HEAT EXCHANGER TUBE STACK AND 'WASTING ZINC ANODE'

1. The wasting zinc anode should be checked regularly at least every six months and replaced every year or sooner, as necessary. The anode is attached to the bolt inserted in the end cap of the heat exchanger. See photo 50. On most engines this is on the aft end.
2. Unscrew the bolt and replace the complete unit with a new one.
3. It is possible for fine sea weed and other debris to get past the inlet filter and into the tube stack. This should be removed and cleaned. See photo 51.
4. Drain off coolant into a bucket.
5. Unscrew the 6 end cap retaining bolts using a 5 mm Hex key (3 each end of the heat exchanger). Remove the 'O' rings and slide out tube stack. Carefully clean tube stack and end caps.
6. Re-assemble using new 'O' rings. The tube stack can be fitted either way around but must be aligned correctly with the horizontal line and rubber seal between the alignment marks at the exhaust end of the heat exchanger. (This ensures correct coolant flow in the heat exchanger) Do not over tighten end cap bolts.
7. Re-fill engine with coolant (water / anti-freeze solution) and run engine up to temperature to check for leaks.

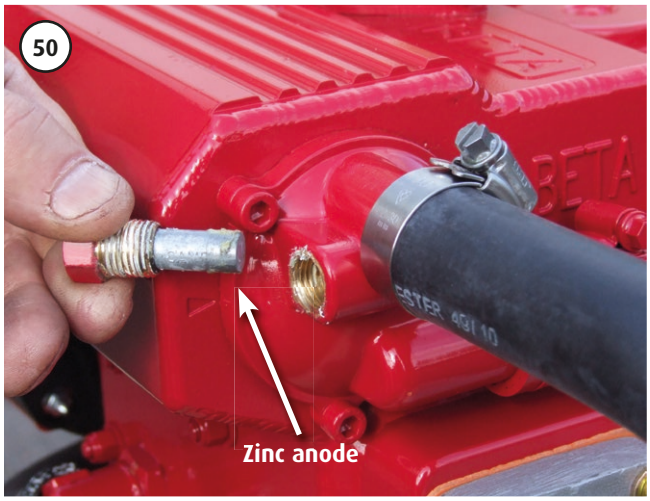

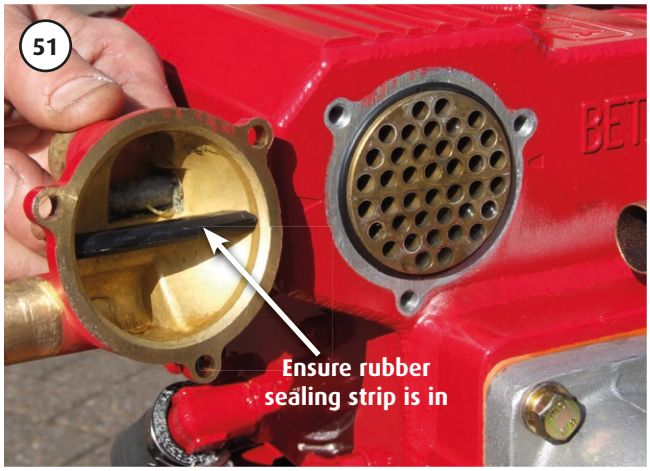

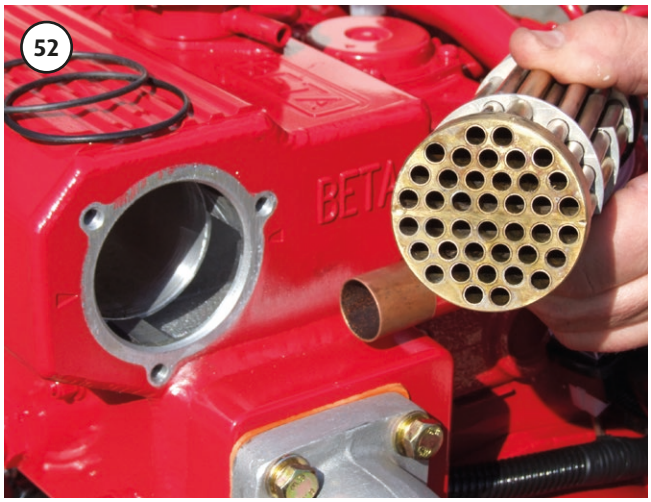

BELT TENSION

WARNING!

Belt tension must only be checked with the engine switched off.

70 AMP ALTERNATOR (HEAT EXCHANGER COOLED)

These engines are fitted as standard with a single belt that drives both the 70 Amp battery charging alternator and the fresh water / engine coolant circulating pump.

1. The belt tension is adjusted by swinging the alternator outboard as it pivots on its support bolts. See photo 53.
2. With the engine stopped, loosen the support bolts and the link adjusting bolt.
3. Push alternator outboard by hand to tension the belt, then tighten link bolt.
4. Check that the depression of the belt (at position shown) is approximately $^1/_2$" or 12 mm when pushed down firmly by thumb. Tighten support bolts. See photo 54.
5. Belt tension should be regularly checked especially during the first 20 hours of running in a new belt, as stretching occurs.

LARGER ALTERNATOR (OPTION)

The same method applies as outlined above with the 'polyvee' flat belt, but final tensioning must be by hand only. Over tensioning will cause premature failure of components.

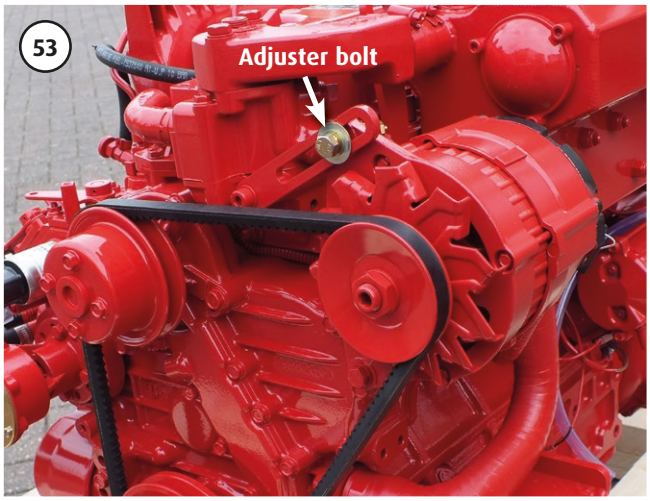

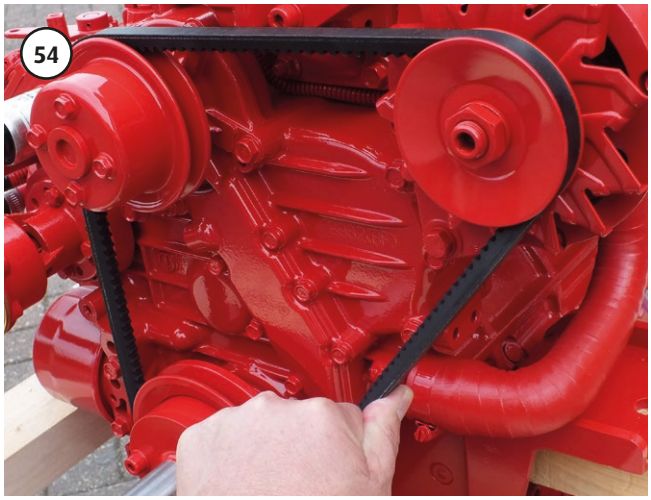

AIR FILTER

These engines are fitted with an air intake filter which should be checked every season and changed every 2 years or sooner if badly clogged. If badly clogged check more often.

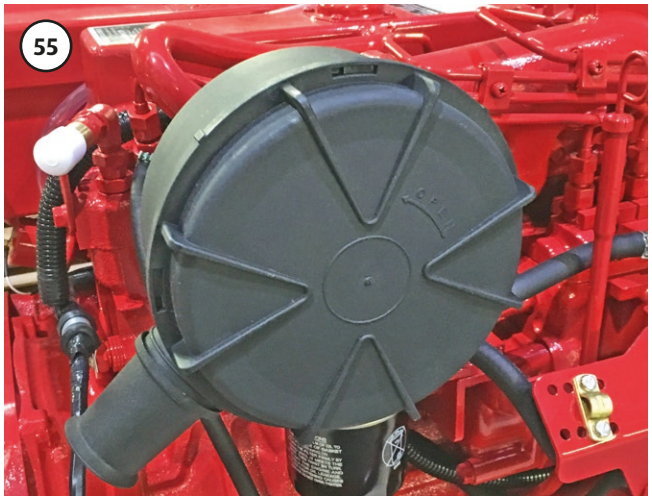

ELECTRICAL MAINTENANCE

⚠ WARNING!

UNDER NO CIRCUMSTANCES SHOULD THE BATTERY BE DISCONNECTED OR SWITCHED OFF WHEN THE ENGINE IS RUNNING. THIS WILL SERIOUSLY DAMAGE THE ALTERNATOR.

PANELS AND WIRING

SEE INSTALLATION NOTES, PAGE 30.

GENERAL MAINTENANCE

1. The control panel must be protected from rain and sea water, see installation. Sea water entering the key switch will eventually cause corrosion and could result in the starter motor being permanently energised and burning out. Spray key switch every month with WD40 or equivalent; or apply 'vaseline'.
2. Check batteries for acid level and top up if required. For low maintenance and 'gel' batteries see manufacturers instructions.
3. Loose spade terminal connections are the most common cause for electrical faults - check on a regular bases (see maintenance instructions).

WINTERISING AND LAYING UP

a) The engine lubricating oil and lubricating oil filter should be changed at the end of the season rather than in the spring. See section 2.

b) The closed circuit cooling system must contain an anti-freeze coolant solution. The coolant solution is a mixture of fresh water and anti-freeze (Ethylene Glycol based conforming to BS6580:1992) with the anti-freeze being a 50% solution (this also applies to warm and tropical climates). The warranty is invalid if the correct percentage/ratio is not used.

c) For cold climates where the air or water temperatures can fall below 3°C, the sea water circuit must be protected in addition to the fresh water system. This is best achieved as follows:

- Close the inlet seacock to the engine (engine stopped).
- Disconnect the sea water inlet pipe and dip it into a small bucket containing 50/50 anti-freeze solution.
- Start the engine (out of gear) and run for 5 to 10 seconds until the anti-freeze is used up and can be seen coming out of the exhaust outlet.
- Shut engine off and reconnect the inlet pipe to the seacock. The sea water or raw water circuit is now protected by anti-freeze.

d) Ensure instrument panel is well protected and give the key switch a spray of WD40 / Petroleum Jelly or equivalent.

e) With the engine stopped, disconnect the battery (always disconnect the negative cable first and re-connect the negative cable last) and take it ashore for trickle charging and top up as necessary. If AC power is available then this can be done on the boat.

f) Fuel tanks should be kept full during the lay up period to eliminate water condensation in the tank. Water entering the fuel injection system can cause considerable damage.

LAYING UP ASHORE

a) Change the engine oil before the boat is taken out of the water. Remember that warm engine oil is much easier to pump than cold!

b) Cooling system - As above in 'Winterising and Laying up' paragraphs (b) to (f) should be followed.

c) If the engine is to be laid up for more than 6 months then remove the sea water pump impeller.

d) If the engine will not be used or run for periods longer than 6 months we recommend that the engine is 'inhibited' - this involves running the engine for about 5 minutes to:

- Replace all the diesel fuel in the fuel system and injection pump by running the engine with 'calibration fluid' (fuel pump test oil ISO 4113).
- Allow 'Ensis' to circulate around the lubricating oil system by draining out the standard lubricating oil and replacing it with a rust preventative oil such as 'Ensis' or similar.

Trouble Shooting

Beta diesels are very reliable if installed and serviced correctly, but problems can occur and the following list gives the most common ones and their solution.

Problem: Engine does not start but starter motor turns over OK

Possible Cause	Solution
No fuel:	Turn fuel cock on and fill tank.
Air in fuel system:	Vent air (see initial start-up)
Water in fuel:	Change fuel filter, check fuel/water separator and bleed system.
Blocked fuel pipe:	Clean out and bleed system.
Fuel filter clogged:	Change filter and bleed system.
Fuel lift pump blocked:	Remove and replace.
Blocked injector:	Remove and clean.
Fuel return not fed back to the tank:	Re-route fuel return pipe.
Heater plugs not working:	Check wiring to the plugs, and replace plugs if they are burnt out.
Stop solenoid stuck in off position:	Check solenoid is free to return to run position.

Problem: Starter motor will not turn or turns over very slowly

Possible Cause	Solution
Battery discharged:	Charge battery or replace. Check alternator belt tension.
Starter motor flooded with sea water:	Remove and clean, or replace.
Wiring disconnected or loose:	Check circuit for loose connections.
Water in cylinders:	Incorrect installation. **This is serious** - check engine oil for signs of water (creamy-coloured oil). Ring your dealer.
Engine harness fuse blown:	Replace fuse located by starter motor (or above flywheel housing) and check for wiring faults.

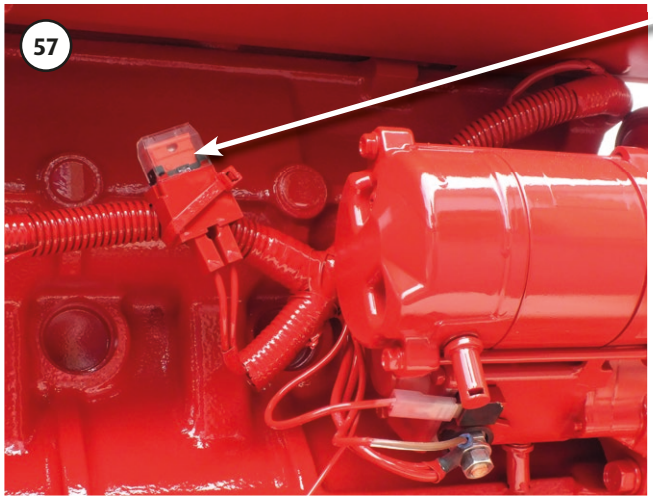

Fuse.

Note: For convenience, some engines are supplied with a spare fuse and holder attached to the main engine fuse holder.

Problem: Low power output

Possible Cause	Solution
Propeller is too big:	Change or depitch.
Check gearbox reduction ratio relative to propeller size:	Change.
Blocked fuel filter:	Replace.
Blocked air filter:	Replace.
Air in fuel system:	Check system and bleed
Governor spring incorrectly mounted:	Dealer to adjust.
Single lever control not operating correctly:	Disconnect speed control cable and move the lever by hand. Adjust cable.
The electrical load is too large on start up:	Disconnect or reduce the load.

Problem: Erratic running/hunting

Possible Cause	Solution
Air in fuel supply:	Check supply system for leaks and fix.
Fuel lift pump faulty:	Replace.
Clogged fuel filter:	Replace.
Fuel return not fed back to the fuel tank, or blocked pipe:	Re-route pipe or clean.
Air filter blocked:	Replace.
Worn or blocked injector:	Service injectors.
Engine rpm in gear is too low, this must be 850 min:	Increase engine tick over speed.
Faulty stop solenoid:	Disconnect wiring to solenoid. If running improves check for a wiring fault.
Broken fuel injection pump spring:	Replace, this is usually caused by water in the engine oil/fuel
Fuel suction head is too much:	Fit electric fuel lift pump.

Problem: Hunting at idle

Possible Cause	Solution
Idle adjustment screw may need adjusting:	speak to Beta Marine for advice with idle adjustment - discuss problem.

Problem: Hunting at higher speeds

Possible Cause	Solution
Fuel supply problem:	Change fuel filters and check fuel supply.

Problem: White or blue exhaust gas

Possible Cause	Solution
Engine oil level too high:	Reduce the level.
Blocked injector:	Service injectors.
Piston ring and bore worn or con rod bent due to water ingression, giving a low compression:	Get compression checked by your dealer or Kubota service agent. He will advise action to be taken.
Check that the breather pipe is clear and not obstructed:	Remove and clean out

Problem: Black exhaust gas

Possible Cause	Solution
Blocked air filter element:	Inspect and replace.
Over pitched propeller - engine will not reach its full rpm:	Get the propeller re-pitched if necessary.
Accumulated debris on hull:	Inspect and clean if required.

Problem: Low oil pressure warning light on when underway

Possible Cause	Solution
Oil frothing due to high installation angle or too high oil level:	Refer to Beta Marine for advice

Problem: Low oil pressure warning when engine speed reduced to tick over

Possible Cause	Solution
Faulty switch sender:	Replace.
Engine running too hot:	Check cooling water flow (see section 2 Cooling).
Oil relief valve stuck partially open with dirt:	Remove and clean.
Blocked oil filter:	Change.
Wiring fault:	Check circuit.
Insufficient oil:	Top up and check for leaks.

Problem: High oil consumption

Possible Cause	Solution
Oil leaks:	Check for leaks.
Piston rings worn:	Overhaul required.
Valve stem and guide worn:	Overhaul required.
Piston rings gap facing the same direction:	Shift ring gap position. Service Agent to check.

Problem: Water in lubricating oil - general

Possible Cause	Solution
Core plug pushed out due to frozen block:	Service Agent to check and replace.
Water pump seal damaged:	Service Agent to check and replace.

Problem: Water in lubricating oil - heat exchanger cooled

Possible Cause	Solution
Oil goes “milky” due to seawater entering exhaust manifold:	Check installation - has anti-syphon valve been fitted? Change engine oil and run engine for 10 minutes each time to eliminate any water. Get fuel injection pump and compression checked by Service Agent.

Problem: Water in lubricating oil - keel cooled

Possible Cause	Solution
Oil goes “milky” due to water entering exhaust manifold and then into the sump:	Check installation - has dry exhaust system been fitted correctly, and ensuring rain water cannot enter the exhaust port and run back? (See Dry Exhaust System).Change engine oil and run engine for 10 minutes each time to eliminate any water. Get injection pump checked by Service Agent.

Problem: Engine overheats - general

Possible Cause	Solution
Low raw water flow:	See below.
Check coolant level:	Top up.
Pressure cap loose:	Tighten correctly or replace.
Switch sender faulty:	Replace.
Insufficient restrictions in pipe to calorifier:	Clamp off pipe to confirm.
High exhaust back pressure:	Must not exceed the information given in ‘exhaust back pressure’ in the installtion section.
Keel cooler insufficient size:	Contact boat builder

Problem: Engine overheats - Heat exchanger only

The most common cause of overheating is insufficient seawater flow due to a blocked intake (weed or a plastic bag!). If this happens then clear the blockage. If the problem is not cured then check the system for sea water flow which should be 18 litres / minute minimum at 1,500 rpm as follows:

(a) With the boat tied up and out of gear run the engine up to 1500 rpm. Hold a plastic bucket over the exhaust outlet for 10 seconds and measure the amount of water collected*. Multiply this value by 6 to give the flow in litres / minute. Repeat twice and take an average. If the flow rate is noticeably less than the 18 litre per minute minimum at 1,500 rpm, then:

(b) Check impeller in sea water pump - if worn replace.

(c) If impeller has a vane missing then this will be lodged either in the pipe to the heat exchanger or in the end of the exchanger. This must be removed.

(d) Check flow again as in (a).

***Note:** This operation must only be done in safe conditions, in port and with two assistants. Working from a rubber dinghy is best. The person holding the bucket should take precautions against breathing in the exhaust gasses.

Problem: Engine overheats - Keel cooling only

Sometimes overheating is caused by:

(a) Not fully venting the engine cooling system of air. It is necessary to remove all air from the cooling system - including the "skin" tanks and (if fitted) the Calorifier and associated piping.

(b) Incorrectly sized "skin" tanks that have been sized for 'usual' canal use (rather than maximum engine output that can sometimes be required) on fast flowing rivers. An additional "skin" tank may need to be fitted; please refer to our website: Inland waterways - Guidelines: keel cooling tank sizes.

Problem: Battery quickly discharges

Possible Cause	Solution
High load and insufficient running:	Reduce load or increase charging time. Large domestic battery banks subject to high electrical loads will take a considerable time to recharge from a single alternator.
Low electrolyte level:	Top up.
Fan belt slipping - black dust in engine compartment, engine compartment temperature too high:	Adjust tension/replace belt with a high temperature type and/or improve engine compartment ventilation.
Alternator defective:	Check with Agent.
Battery defective:	Replace.
Poor wiring connection:	Check wiring system.

Problem: Morse control cable will not fit

Possible Cause	Solution
Incorrect fitting:	Cables are being fitted the wrong way around, switch over and fit the opposite way.

Problem: Panel rev counter not working (when fitted)

Possible Cause	Solution
No W connection to alternator:	Check output from 'W' connection. Should be about 9V AC
Wiring fault:	Check circuit

Problem: Transmission noise

Possible Cause	Solution
Check gearbox oil level:	Top up.
"Singing" propeller:	Check with propeller supplier about 'harmonics'.
Drive plate rattle at tickover:	Check engine rpm (must be 850rpm min. in gear).
Worn drive plate:	Change.
Propeller shaft hitting the Gearbox half coupling:	Move shaft back to give 5mm - 10mm clearance (Type 12/16 couplings only).
Propeller torsionals causing gears to rattle at low rpm:	Fit a torsional flexible coupling such as Centaflex type 16 or equivalent.

Problem: Vibrations

Possible Cause	Solution
Poor alignment to shaft:	The alignment must be accurate even if a flexible coupling is used (see section 1, Alignment).
Flexible mounts not adjusted correctly to take even weight:	Check relative compression of each mount.
Flexible mount rubber perished:	Replace. (Diesel or oil will eventually perish most rubbers.)
Loose securing nut on flexible mount:	Check alignment and then tighten the nuts.
Insufficient clearance between the propeller tip and the bottom of the boat:	There must be at least 10% of the propeller diameter as tip clearance between the propeller and the bottom of the boat. Reduce propeller diameter/ increase pitch.
Loose zinc anode on the shaft:	Tighten or replace.
Worn cutless bearing or shaft:	Replace.
Weak engine support / bearers:	Check for cracked or broken feet.

Problem: Knocking noise

Possible Cause	Solution
Propshaft touching gearbox output coupling through split boss or Type 16 coupling:	Adjust, giving correct clearance give 5mm - 10mm between gearbox and propeller shaft
Flexible mount stud touching engine bed:	Adjust stud to clear
Drive plate broken:	Replace / repair
Engine touching engine bed:	Re-align engine / modify bed
Injectors blocked through excess carbon caused by water in the fuel:	Remove and check injector nozzles, replace if required.

ELECTRICAL FAULT FINDING (ENGINES AFTER JULY 2005 ONLY)

The following chart is compiled to aid diagnosis of electrical faults, based on the Beta 10 - 90hp range of engines. If your engine was built before July 2005, contact Beta Marine for the relevant electrical trouble shooting guide.

Note: our standard control panels are for earth return installations only (where battery negative cable is connected directly to engine ground). For insulated earth (where battery negative cable is isolated from engine ground) different harnesses, alternators, switches for oil pressure and engine temperature are fitted.

Standard sea specification engines (heat exchanger cooled) are supplied with a single alternator, mounted port side, supplying power to starter battery and control panel. Standard canal specification engines (keel cooled) are supplied with twin alternators:

- 1st alternator, mounted port side, supplying power to starter battery and control panel
- 2nd alternator, the standard mounting position for this is above the engine on the starboard side (or below 1st alternator on 75 and 90hp), supplying power to the domestic battery system.

Both of these alternators work independently, if the domestic battery system is disconnected, the engine will still run correctly but:

- Domestic charge warning lamp will not function
- Warning buzzer will remain on at all times

Note: The two way plug on panel loom will only have a corresponding socket to connect into from the engine if a 2nd alternator is fitted which requires this connection. Engines with only one alternator do not utilise this connection.

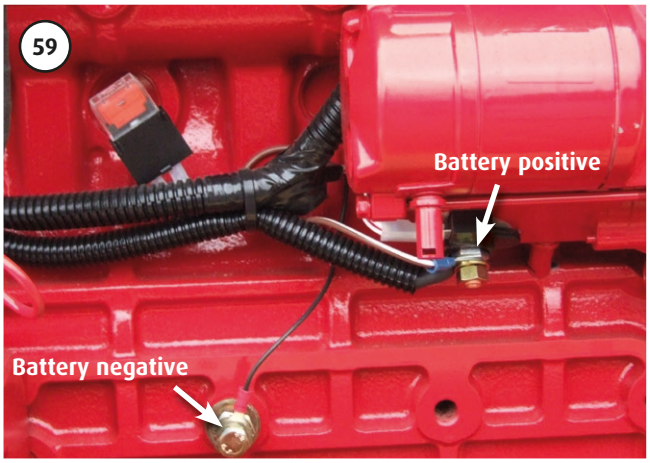

STANDARD KEYSWITCH CONTROL PANELS ARE SUPPLIED WITH FOUR OR FIVE LAMPS.

Four lamp panels: A, ABV, B these panels utilise bulbs inside sealed lamp holders.

Five lamp panels: AB and C; these panels also utilise bulbs inside sealed lamp holders, having an additional lamp for 'domestic battery charge'.

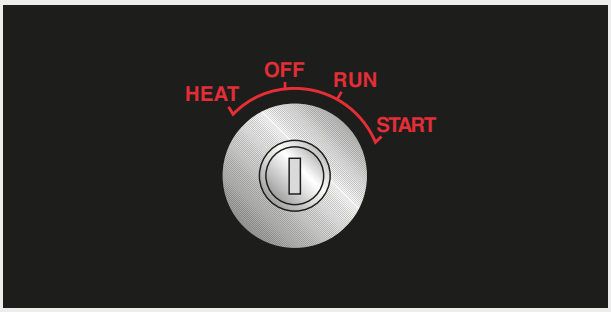

Turn on battery isolating switch. With keyswitch* in run position and engine off:

- Red lamp for 'low oil pressure' should function.
- Red lamp for 'high engine temperature' should not function (when engine is cold/cool/warm). This lamp will only ever function if the engine is over temperature.
- Red lamp for 'no starter battery charge' should function.
- Red lamp for 'no domestic battery charge' should function (**Note:** this will only function if a second alternator is fitted to the engine and connected to a charged battery).
- Green lamp for 'panel power on' should function. Buzzer should sound.

ABVW - KEYLESS FOUR LAMP PANEL (WITHOUT KEYSWITCH)

This panel controls the engine with three water resistant push buttons instead of a keyswitch, and is less prone to damage and corrosion from sea water spray. This panel utilises bulbs inside sealed lamp holders

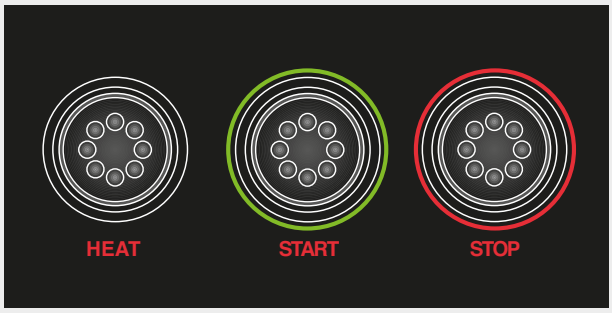

Turn on battery isolating switch.

1. Press and hold 'HEAT' button for ten seconds maximum.

   Red lamp for 'low oil pressure' should function.

   Red lamp for 'high engine temperature' should not function (when engine is cold/cool/warm). This lamp will only ever function if the engine is over temperature.

   Red lamp for 'no starter battery charge' should function.

   Green lamp for 'panel power on' should function. Buzzer should sound.

2. Press 'START' button and hold in position until engine fires (see initial start-up section for maximum time starter can be operated). Release button (when engine has started).

   All red warning lamps should extinguish and buzzer should stop sounding. The oil pressure lamp may take a few seconds to switch off and the charge fail lamp may remain on until engine rpm is increased to approximately 1,000rpm if the engine was started at tickover.

   Green lamp for 'panel power on' should still function.

3. To stop the engine press the 'STOP' push button, hold in until engine stops. This button also switches the power off to the gauges, engine and power on lamp. Before investigating any specific electrical problem, always check:

   - Connection between panel harness and panel loom. It must be clean, dry and secured with a cable tie.
   - Check the start battery is connected to the correct terminal on the starter motor.
   - Check the domestic battery is switched on and connected to the correct terminals for the 2nd alternator.
   - Battery connections, inspecting condition of cables from battery to engine. If in doubt measure the voltage at the engine.
   - If alternator charge problem, measure battery voltage with engine off and again with engine running, if there is an increase alternator is functioning correctly, if not refer to check list.

ELECTRICAL FAULT FINDING - ALL LAMP PANELS

Problem	Possible Cause and Solution
No warning lamps or buzzer functioning, engine will not start or stop	· Battery isolation switch in off position - **switch on** · Starter battery discharged - **charge** · Engine fuse blown - **check fuse** (above starter motor or flywheel housing) and replace if necessary · Check for wiring faults
Non function of warning lamp. **The water temperature lamp will not function unless engine is overheating or there is a wiring fault**	· Disconnect switch wire to non-functioning lamp: green/blue –water temperature, white/brown –oil pressure, brown/yellow –alternator charge. Reconnect wire temporarily to another warning lamp that is functioning; if wire switches lamp on replace faulty lamp · Disconnect positive feed to non-functioning lamp. Reconnect temporarily with wire from another warning lamp that is functioning, if wire switches lamp on rewire with new connection · If none of the above, check continuity of connections from panel to engine
Water temperature warning lamp on when engine is not over temperature (Not B or C deluxe panel see table on following page)	**If engine is cold:** · Faulty wiring, check connection and continuity (small green/blue) from switch to panel lamp. Ensure this connection is not shorting to earth (ground) · Faulty temperature switch - if lamp switches off on removal of connection to switch unit, replace **If engine is warm:** · Switch wire connected to large sender terminal of switch/sender unit. Remove and refit to smaller (switch) terminal
Buzzer not functioning. **The buzzer will not sound for green 'power on' lamp**	· If lamp is functioning but buzzer not sounding, check connection and continuity from illuminated warning lamp (red not green) to buzzer board · Faulty warning panel buzzer board - **replace**
Starter battery charge lamp not functioning	**If tacho not functioning:** · Alternator not connected properly, check continuity of small brown wire from rear of alternator to 'AC' position on keyswitch · Alternator connected properly, faulty alternator - **replace** **If tacho functioning correctly:** · Check continuity of small brown/yellow wire from rear of alternator to no charge warning lamp on rear of panel · If alternator connected properly, faulty panel warning lamp - **replace**
If tacho not functioning	· Check connections on rear of tacho, especially black/blue wire, terminal '4' · Check connection of black/blue wire on rear of 1st alternator (W connection, usually a bullet on flying lead, or lowest connection on alternators with 3 pin coupler) · Check continuity of black/blue wire from alternator to tacho · Measure voltage from alternator W connection to earth (ground), should be approx. 7.5 - 9.0 volts AC
Domestic charge lamp not functioning, buzzer remains on with engine running	· Domestic battery not connected · Domestic battery not connected correctly: B+ to domestic isolation block on starboard rail (port on 75 - 95hp) B- to engine earth (ground) · Domestic battery flat · Panel relay faulty / incorrectly wired: Check voltage at relay terminal 86, white wire is positive feed for warning lamp from AC position of keyswitch
Domestic charge lamp not functioning, buzzer switching off with engine running. **This lamp will only function if a second alternator is fitted to the engine**	· No second alternator fitted to engine, domestic lamp not used · D+ (charge indication) lamp connection at rear of alternator not connected · Two way plug and socket disconnected between engine harness and panel loom

ELECTRICAL FAULT FINDING - C DELUXE AND B PANELS

In addition to the fault finding detailed on the previous table, the following is specific for the deluxe panel (Also applicable for the B panel with Murphy water temperature gauge)

Problem	Possible Cause and Solution
Oil pressure warning lamp not functioning, oil pressure gauge showing maximum deflection. Engine off and keyswitch in run position	• Faulty wiring - check wire connection and continuity (small white/brown) from sender to panel lamp. Ensure this connection is not shorting to earth (ground)
Oil pressure gauge showing no movement - even when engine is started. Warning lamp functioning correctly	• Faulty wiring - check oil pressure sender wire (small white/brown) is connected
Oil pressure showing no movement, warning lamp not functioning correctly	• Check connection to oil pressure gauge, if plug is not connected to socket on rear of gauge, reconnect • If all connections are correctly made, possible faulty sender unit - check resistance to earth, approx. 50 Ω. Replace if no reading or short-circuited • If adjusted correctly and buzzer still sounding, possible faulty switch gauge unit - **replace**
Oil pressure showing normal operating pressure (0.75 - 5 bar). Buzzer sounding and lamp illuminated.	**Engine warm:** • Incorrectly calibrated switching point for warning lamp, adjust on rear of gauge to 0.5 bar (minimum adjustment on gauge) • If adjusted correctly and buzzer still sounding, faulty switch gauge unit - **replace**
Water temperature gauge showing 120°C / 250°F. **This also applies to the B Panel with Murphy gauge**	**Engine cold/cool:** • Faulty wiring, check water temperature sender wire is not shorting to earth (ground) • Faulty sender unit, - check resistance to earth, approx. 3.5k Ω (cold) – 0.5k Ω (warm). Replace if notably less
Water temperature gauge showing normal operating temperature (85°C). Buzzer sounding and lamp illuminated. **This also applies to the B Panel with Murphy gauge**	**Engine warm:** • Incorrectly calibrated switching point for warning lamp adjust on rear of gauge to 100°C/210°F. • If adjusted correctly and buzzer still sounding, faulty switch gauge unit - **replace**
Water temperature gauge showing no movement, lamp not illuminated, engine warm. **This also applies to the B Panel with Murphy gauge**	• Check connection to sender, if disconnected gauge will not function • Check connection to temperature gauge, if plug is not connected to socket on rear of gauge reconnect. If all connections are correctly made, faulty sender unit - check resistance to earth, approx. 3.5k Ω (cold) - 0.5k Ω (warm). Replace if no reading

ELECTRICAL FAULT FINDING - NON-BETA PANEL

Engines can be supplied wired up to suit VDO switch senders, usually fitted to a non-Beta control panel. If so refer to our wiring diagram 200-60971/01 (also part number for replacement harness)

- Loom is configured differently in the 11-way plug to accommodate the extra wiring.
- Small brown wire (battery sensed alternator feed) fitted with bullet connection beside harness plug.
- Oil pressure and water temperature switch / senders fitted to engine, requiring individual connections for driving gauges and warning lamps.

Note: Water temperature switch/sender (Part number 200-01133)		
Large spade is sender connection		(green/blue)
Small spade is switch connection		(blue/yellow)
Oil pressure switch/sender (Part number 200-62680)		
G	Gauge wire	(white/brown)
M	Earth (ground)	(black)
WK	Warning lamp	(green/yellow)

ELECTRICAL FAULT FINDING - EXTENSION HARNESSES

Some installations require one of the 'panel extension 11-way connectors' to be removed to allow the cable to be passed through bulkheads etc.

If any panel problems are experienced, after this has been done, visually check all 11-way connections on engine harness to panel extension (**and panel extension to panel on C 'Deluxe'**) to ensure wire colours to each terminal match up to the correct colour in its corresponding terminal.

Extra attention must be given to black (ground) and black/blue (tacho), also brown (switched positive to alternator) and brown/yellow (charge fail) as these connections are harder to distinguish between in poorly lit areas. Whilst doing this check integrity of each connection to ensure terminals have not become damaged. Once checked, re-fit cable tie around each connection to keep them secure.

ELECTRICAL FAULT FINDING - INSULATED EARTH

If your application is wired as insulated earth return and the engine will not operate correctly, always check starter battery negative is connected to the correct terminal on the isolating solenoid.

It should be connected to the terminal which is also used for all the small black wires, **NOT the terminal with the single black wire connected directly to engine ground.**

Spanner Torque Settings

STANDARD NUTS & BOLTS (GRADE/CLASS 4)

ITEM	SIZE	N M	KGF M	LBF FT (FT LBS)
M6	6 MM	7.9 ~ 9.3	0.8 ~ 0.95	5.8 ~ 6.9
M8	8 MM	17.7 ~ 20.6	1.8 ~ 2.1	13.0 ~ 15.2
M10	10 MM	39.2 ~ 45.1	4.0 ~ 4.6	28.9 ~ 33.3
M12	12 MM	62.8 ~ 72.6	6.4 ~ 7.4	46.3 ~ 53.5

SPECIAL NUTS & BOLTS (GRADE/CLASS 7)

ITEM	SIZE	N M	KGF M	LBF FT (FT LBS)
M6	6 MM	9.8 ~ 11.3	1.0 ~ 1.15	7.2 ~ 8.3
M8	8 MM	23.5 ~ 27.5	2.4 ~ 2.8	17.4 ~ 20.3
M10	10 MM	48.1 ~ 55.9	4.9 ~ 5.7	35.4 ~ 41.2
M12	12 MM	77.5 ~ 90.2	7.9 ~ 9.2	57.1 ~ 66.5

BETA 43 TO BETA 60 - SPECIFIC NUTS & BOLTS

ITEM	SIZE X PITCH	N M	KGF M	LBF FT (FT LBS)
CYLINDER HEAD BOLT	M11 X 1.25	93.2 ~ 98.0	9.5 ~ 10.0	68.8 ~ 72.3
CONNECTING ROD BOLT	M8 X 1.0	45.0 ~ 49.0	4.5 ~ 5.0	33.0 ~ 36.0
FLYWHEEL BOLT	M12 X 1.25	98.1 ~ 107.0	10.0 ~ 11.0	72.4 ~ 79.5
MAIN BEARING CAP - BOLT 1	M9 X 1.25	46.0 ~ 50.0	4.7 ~ 5.2	34.0 ~ 37.0
MAIN BEARING CAP - BOLT 2	M10 X 1.25	69.0 ~ 73.0	7.0 ~ 7.5	51.0 ~ 54.0
NOZZLE HOLDER ASSEMBLY	M20 X 1.5	49.0 ~ 68.0	5.0 ~ 7.0	37.0 ~ 50.0
CYLINDER HEAD COVER BOLT	M6 X 1.0	6.9 ~ 11.2	0.7 ~ 1.15	5.1 ~ 8.3
GLOW PLUG	M10 X 1.25	20.0 ~ 24.0	2.0 ~ 2.5	15.0 ~ 18.0
OIL PRESSURE SWITCH	BSP 1/8″	15.0 ~ 19.0	1.5 ~ 2.0	11.0 ~ 14.0
ROCKER ARM BRACKET SCREW	M8 X 1.25	24.0 ~ 27.0	2.4 ~ 2.8	18.0 ~ 20.0
IDLE GEAR SHAFT BOLT	M8 X 1.25	24.0 ~ 27.0	2.4 ~ 2.8	18.0 ~ 20.0
CRANKSHAFT NUTS	M30 X 1.5	138.0 ~ 156.0	14.0 ~ 16.0	102.0 ~ 115.0

We recommend that you refer to the Kubota Workshop Manual for detailed maintenance and torque setting information, or contact your local Dealer, or direct to us. We can provide Workshop Manuals as a 'PDF' if required.

Diagram Index

1. Typical starter motor ratings	Page 6
2. Suggested engine starter battery size	Page 6
3. Keyswitch terminations	Page 25
4. Beta 43 - Beta 60 H/E engine harness (70 Amp)	Page 57
5. Beta 43 - Beta 60 H/E engine harness (100/120 Amp)	Page 58
6. Beta 43 - Beta 60 K/C engine harness (45 Amp)	Page 59
7. Starter relay wiring - over 4 metres	Page 60
8. Electric fuel lift pump	Page 61
9. Diagram of panel 'A' & cut-out	Page 62 & 63
10. Diagram of panel 'AB' & cut-out	Page 64 & 65
11. Diagram of panel 'ABV' & cut-out	Page 65 & 67
12. Diagram of panel 'ABVW' & cut-out	Page 68 & 68
13. Diagram of panel 'B' & cut-out	Page 70 & 71
14. Diagram of Deluxe panel 'C' & cut-out	Page 72 & 73
15. GA of Beta 43/50 H/E PRM150	Page 74
16. GA of Beta 43/50 H/E PRM280	Page 75
17. GA of Beta 43/50/60 H/E PRM260	Page 76
18. GA of Beta 43/50/60 H/E PRM500	Page 77
19. GA of Beta 43/50 H/E TMC60	Page 78
20. GA of Beta 43/50 H/E TMC60A	Page 79
21. GA of Beta 43/50 H/E TMC260	Page 80
22. GA of Beta 43/50/60 H/E TM345	Page 81
23. GA of Beta 43/50 H/E TM345A	Page 82
24. GA of Beta 43/50 H/E ZF15MIV	Page 83
25. GA of Beta 43/50 H/E Saildrive	Page 84
26. GA of Beta 60 H/E ZF63IV	Page 85
27. GA of Beta 50 H/E Bobtail	Page 86
28. GA of Beta 60 H/E Bobtail	Page 87
29. Diagram of extension harness	Page 88
30. Declaration of Conformity for Recreational Craft	Page 89
31. Emission durability	Page 90
32. Service record	Page 94

Note: Further information and arrangement drawings can be found on our website at: **www.betamarine.co.uk**

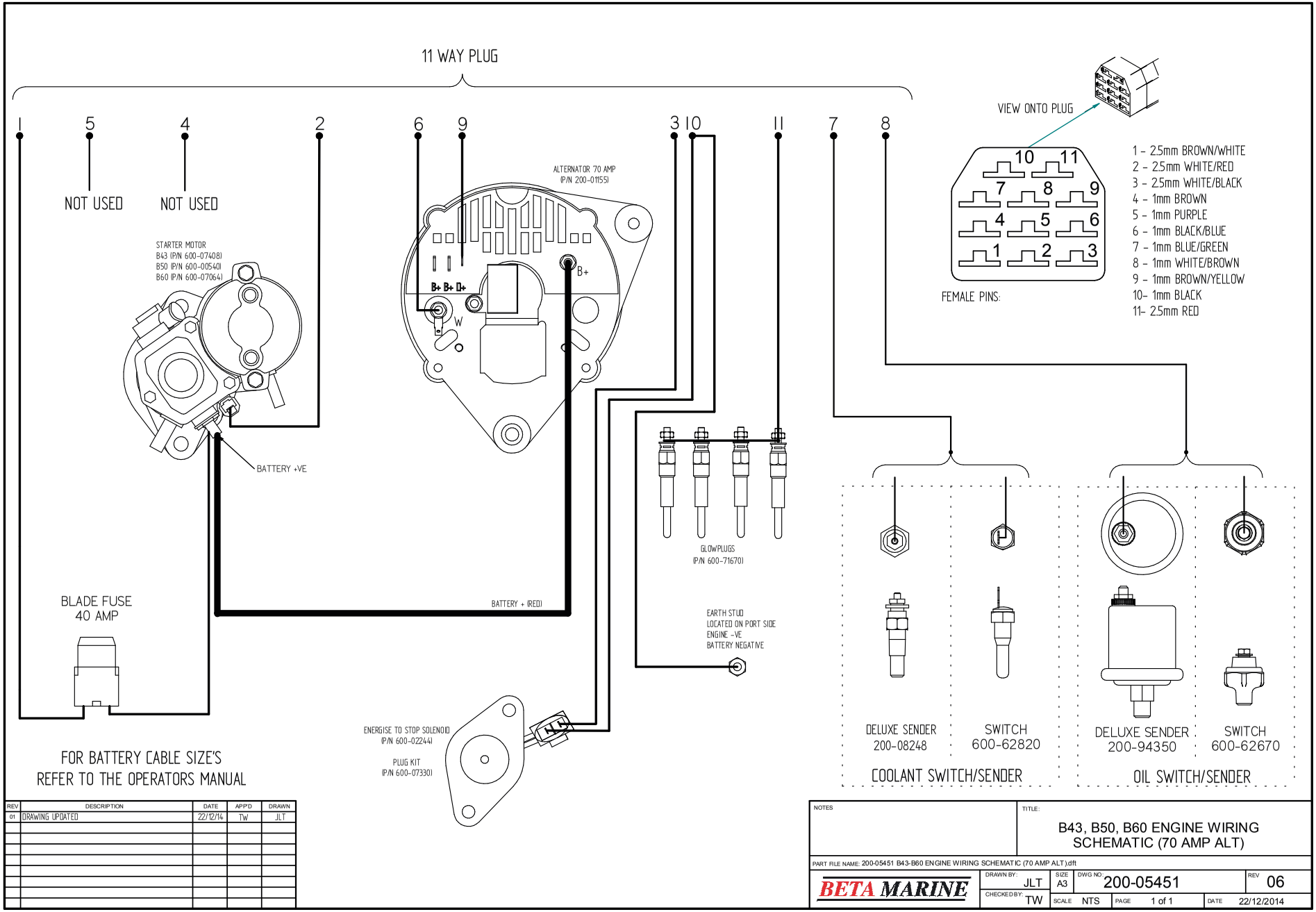

REV	DESCRIPTION	DATE	APP'D	DRAWN
01	DRAWING UPDATED	22/12/14	TW	JLT

NOTES

TITLE: B43, B50, B60 ENGINE WIRING SCHEMATIC (70 AMP ALT)

PART FILE NAME: 200-05451 B43-B60 ENGINE WIRING SCHEMATIC (70 AMP ALT).dft

BETA MARINE

DRAWN BY:	SIZE	DWG NO.	REV
JLT	A3	200-05451	06
CHECKED BY: TW	SCALE NTS	PAGE 1 of 1	DATE 22/12/2014

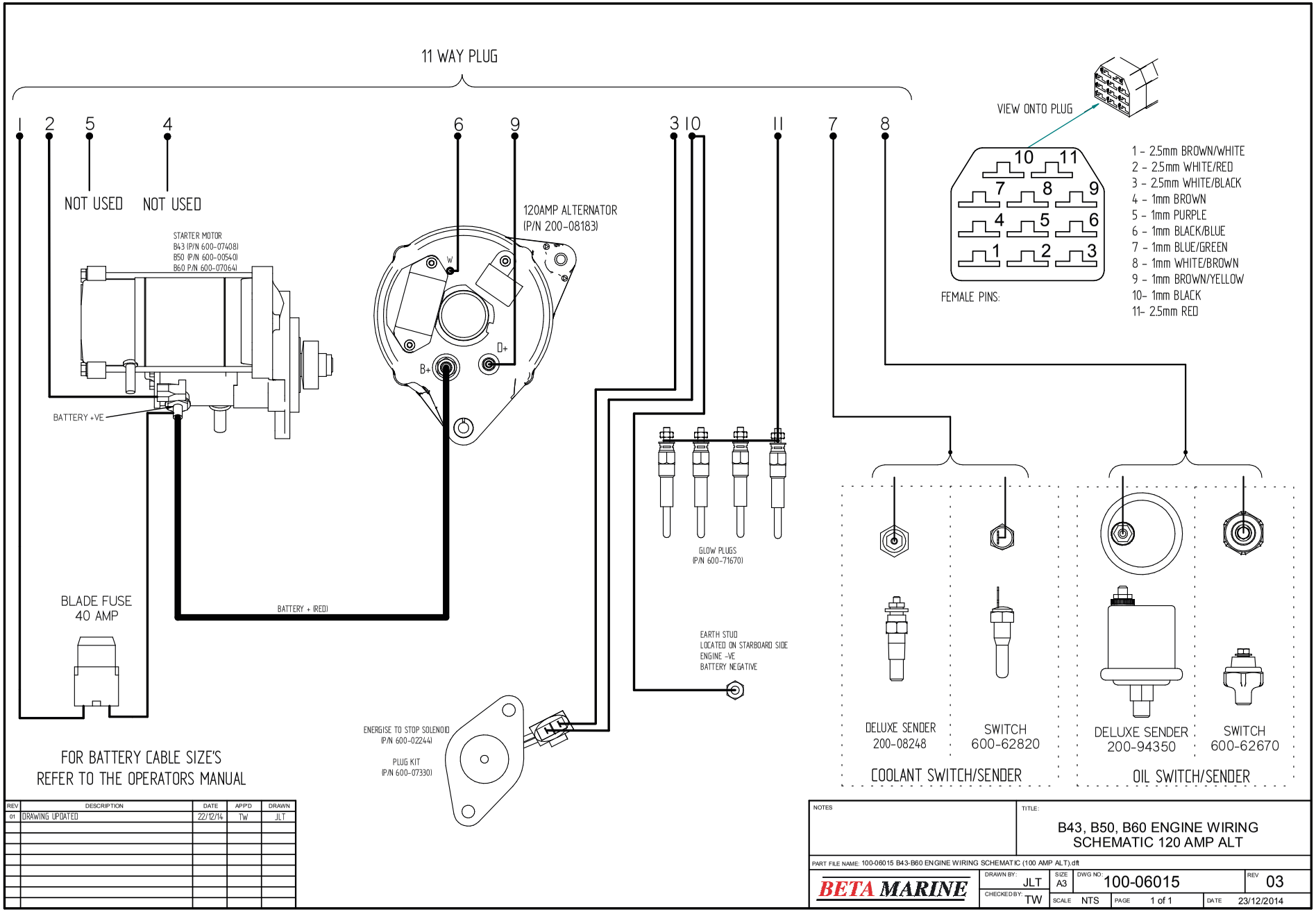

REV	DESCRIPTION	DATE	APP'D	DRAWN
01	DRAWING UPDATED	22/12/14	TW	JLT

NOTES

TITLE: B43, B50, B60 ENGINE WIRING SCHEMATIC 120 AMP ALT

PART FILE NAME: 100-06015 B43-B60 ENGINE WIRING SCHEMATIC (100 AMP ALT).dft

BETA MARINE

DRAWN BY:	SIZE	DWG NO:	REV
JLT	A3	100-06015	03
CHECKED BY: TW	SCALE NTS	PAGE 1 of 1	DATE 23/12/2014

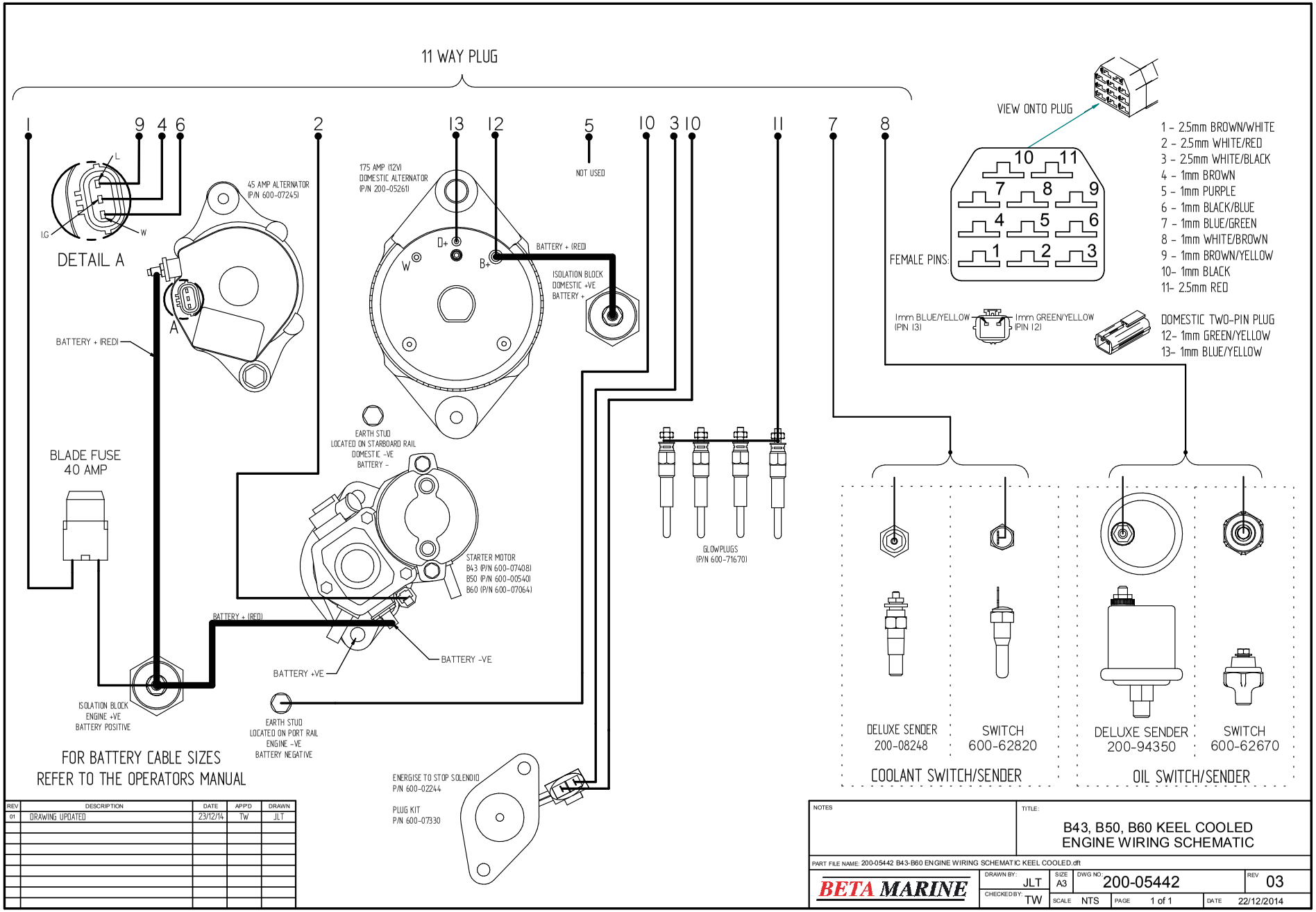

REV	DESCRIPTION	DATE	APP'D	DRAWN
01	DRAWING UPDATED	23/12/14	TW	JLT

NOTES

TITLE: B43, B50, B60 KEEL COOLED ENGINE WIRING SCHEMATIC

PART FILE NAME: 200-05442 B43-B60 ENGINE WIRING SCHEMATIC KEEL COOLED.dft

BETA MARINE

DRAWN BY:	SIZE	DWG NO:	REV
JLT	A3	200-05442	03
CHECKED BY: TW	SCALE NTS	PAGE 1 of 1	DATE 22/12/2014

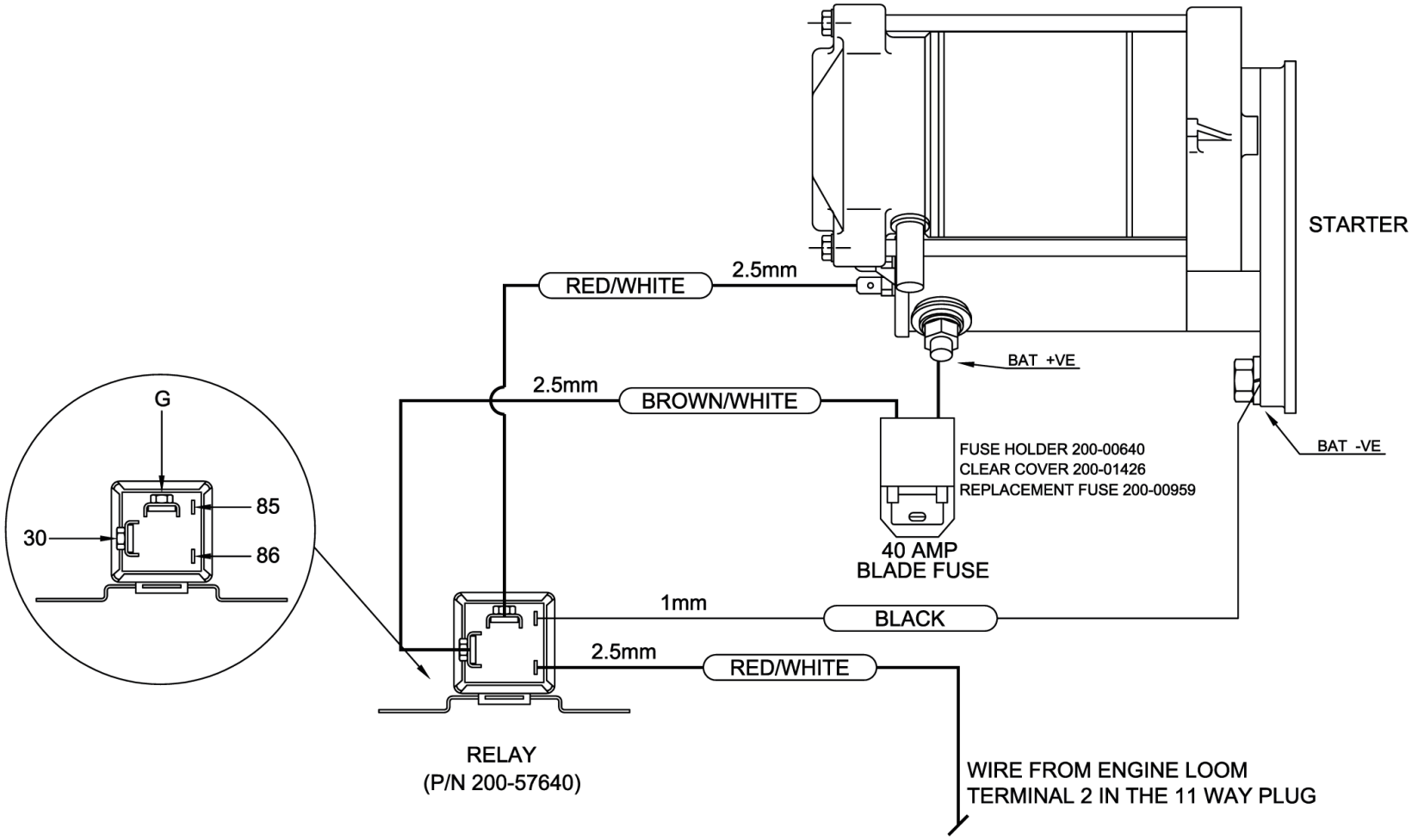

REV	DESCRIPTION	DATE	APP'D	DRAWN
01	wiring change	19/01/09	DM	TW

NOTES

DIMENSIONS IN MM (INCH)
DO NOT SCALE

TITLE

STARTER RELAY
FOR EXTENDED HARNESS
OVER 4m TOTAL LENGTH

BETA MARINE

TEL +44 (0)1452 723492 FAX +44 (0)1452 883742

BETA MARINE LTD.
DAVY WAY, WATERWELLS,
QUEDGELEY, GLOUCESTER
GL2 2AD UK

DRAWN BY:–	SIZE	DWG NO.	REV
TW	A4	300-58520	01
CHECKED BY:– DM	SCALE N/A	PAGE 1 of 1	DATE 16/10/02

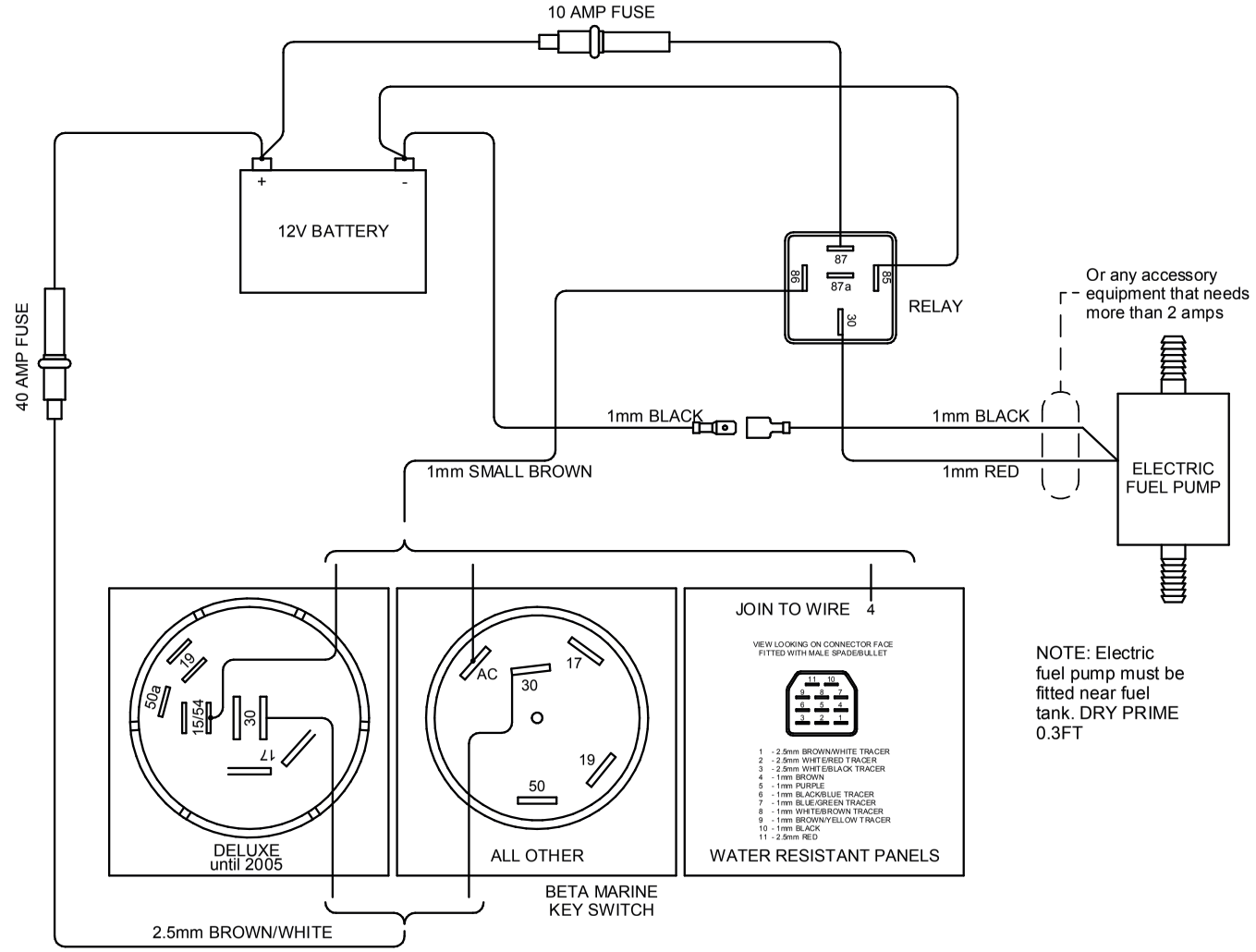

NOTE: Electric fuel pump must be fitted near fuel tank. DRY PRIME 0.3FT

REV	DESCRIPTION	DATE	APP'D	DRAWN
01				
02	NOTE ADDAD	19/7/12	LT	TW
03	ACCESSORY NOTE ADDED	15/09/15	LT	TW

NOTES

TITLE: ACCESSORY AND ELECTRIC FUEL LIFT PUMP WIRING DRAWING

DIMENSIONS IN MM (INCH) DO NOT SCALE

PART FILE NAME: Error: No reference

BETA MARINE

TEL: (01452) 723492 FAX: (01452) 729916

BETA MARINE LTD, DAVY WAY, WATERWELLS, QUEDGELEY, GLOUCESTER. GL2 2AD, UK

DRAWN BY: TW

CHECKED BY: LT

SIZE A4

DWG NO: 200-06421

REV 03

SCALE NTS

PAGE 1 of 1

DATE 15/09/2015

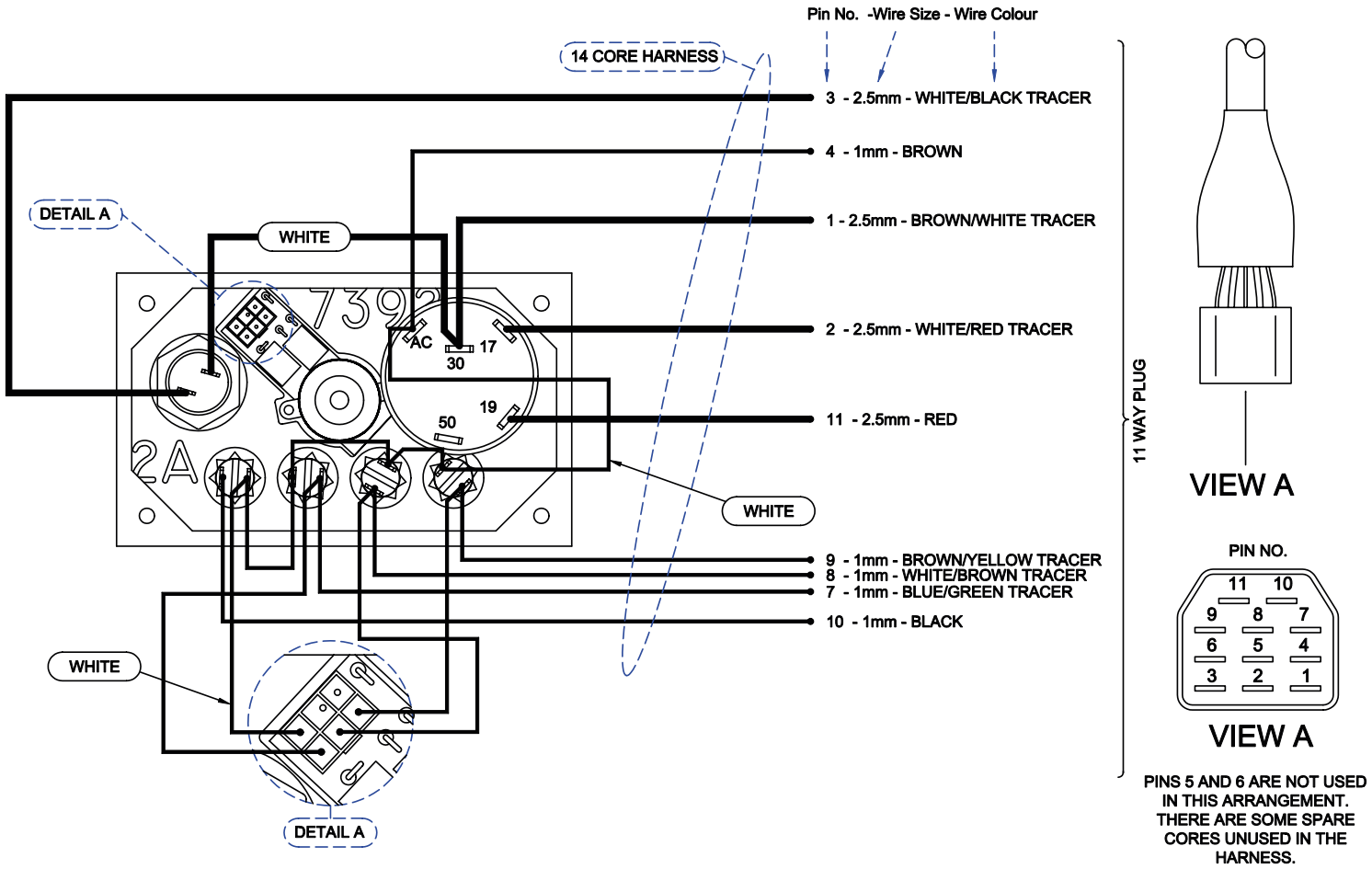

PINS 5 AND 6 ARE NOT USED IN THIS ARRANGEMENT. THERE ARE SOME SPARE CORES UNUSED IN THE HARNESS.

REV	DESCRIPTION	DATE	APP'D	DRAWN
.				

NOTES

FOR PART LIST AND PANEL SIZE SEE DRAWING 200-06305
PANEL PART NUMBER 200-00852

DIMENSIONS IN MM (INCH)
DO NOT SCALE

TITLE

WIRING SCHEMATIC FOR
A PANEL (SIMPLE)
AFTER MAY 2005

BETA MARINE
BETA MARINE LTD.
DAVY WAY, WATERWELLS,
QUEDGELEY, GLOUCESTER
GL2 2AD UK
TEL +44 (0)1452 723492 FAX +44 (0)1452 883742

DRAWN BY:–	SIZE	DWG NO.	REV
TW	A4	200-06516	
CHECKED BY:– DM	SCALE N/A	PAGE 1 of 1	DATE 15/05/05

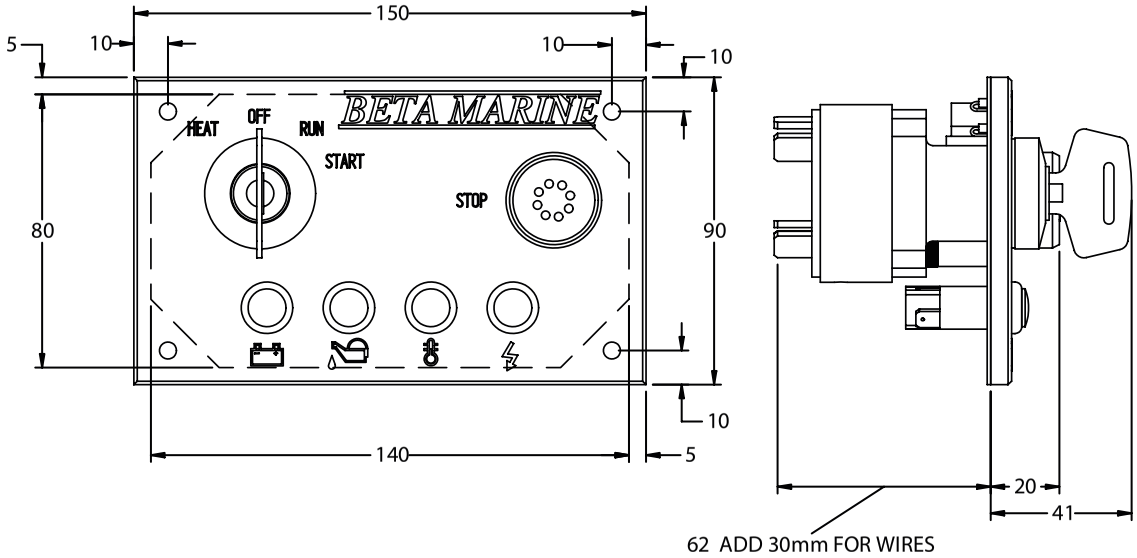

REV	DESCRIPTION	DATE	APP'D	DRAWN
01	CHANGED KEY SWITCH	05/09/08	LT	TW

NOTES

TITLE: A PANEL

DIMENSIONS IN MM (INCH) DO NOT SCALE

MATL:

BETA MARINE

TEL +44 (0)1452 723492 FAX +44 (0)1452 883742

BETA MARINE LTD.
DAVY WAY, WATERWELLS,
QUEDGELEY, GLOUCESTER
GL2 2AD UK

DRAWN BY:-	TW	SIZE	A4	DWG NO.	200-06305	REV	01
CHECKED BY:-	LT	SCALE	NTS	PAGE	2 of 2	DATE	05/09/2008

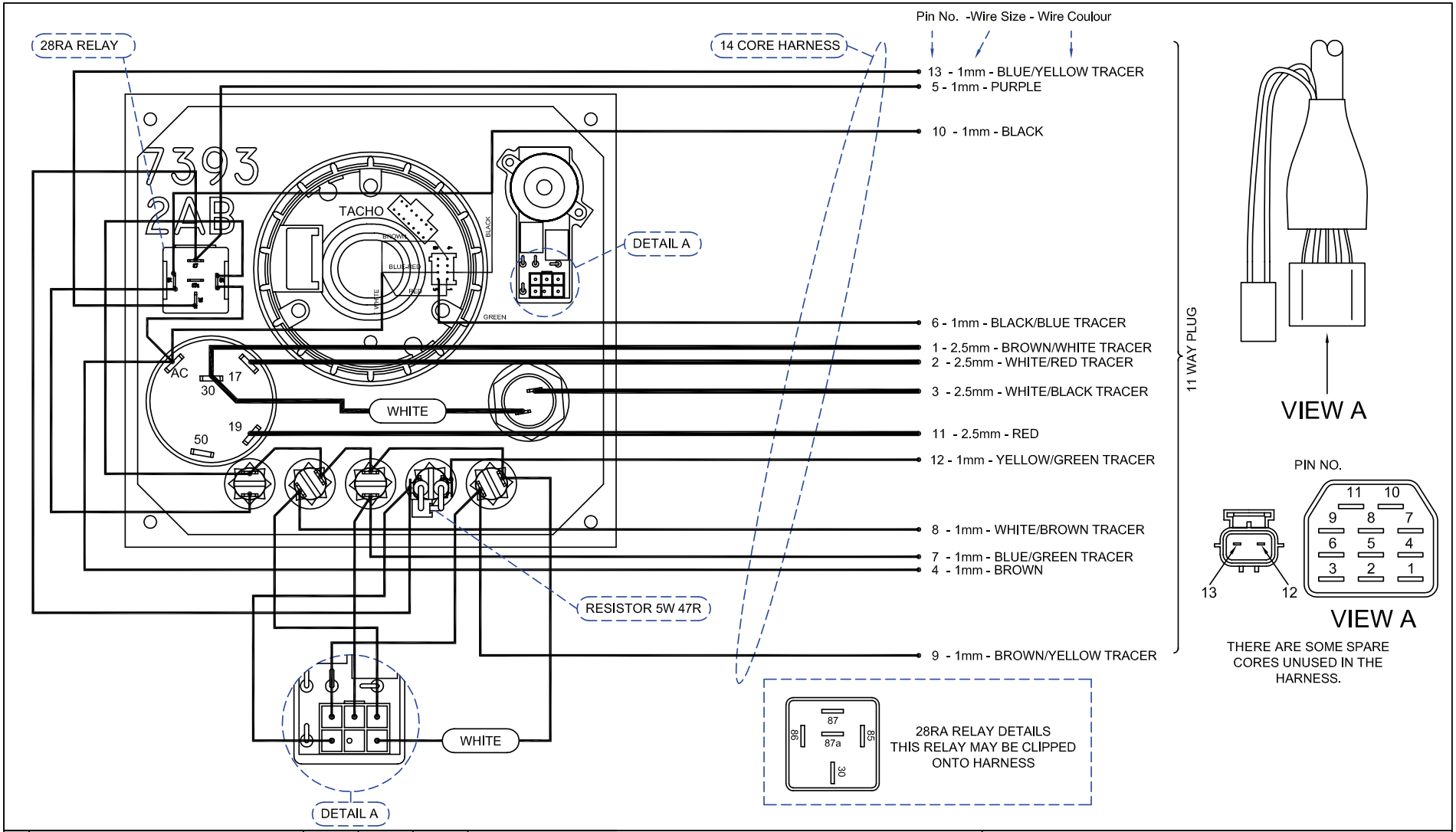

REV	DESCRIPTION	DATE	APP'D	DRAWN
0.1	TACHO AND DOMESTIC WIRING	22/04/11	DM	TW

NOTES

FOR PART LIST AND PANEL SIZE SEE DRAWING 200-06304
PANEL PART NUMBER 200-00850
(THIS EXCLUDES TACHO)

DIMENSIONS IN MM (INCH)
DO NOT SCALE

TITLE

WIRING SCHEMATIC FOR
AB PANEL
AFTER MAY 2011

BETA MARINE
BETA MARINE LTD.
DAVY WAY, WATERWELLS,
QUEDGELEY, GLOUCESTER
GL2 2AD UK
TEL +44 (0)1452 723492 FAX +44 (0)1452 883742

DRAWN BY:–	SIZE	DWG NO.	REV
TW	A4	200-06517	01
CHECKED BY:– DM	SCALE N/A	PAGE 1 of 1	DATE 22/04/11

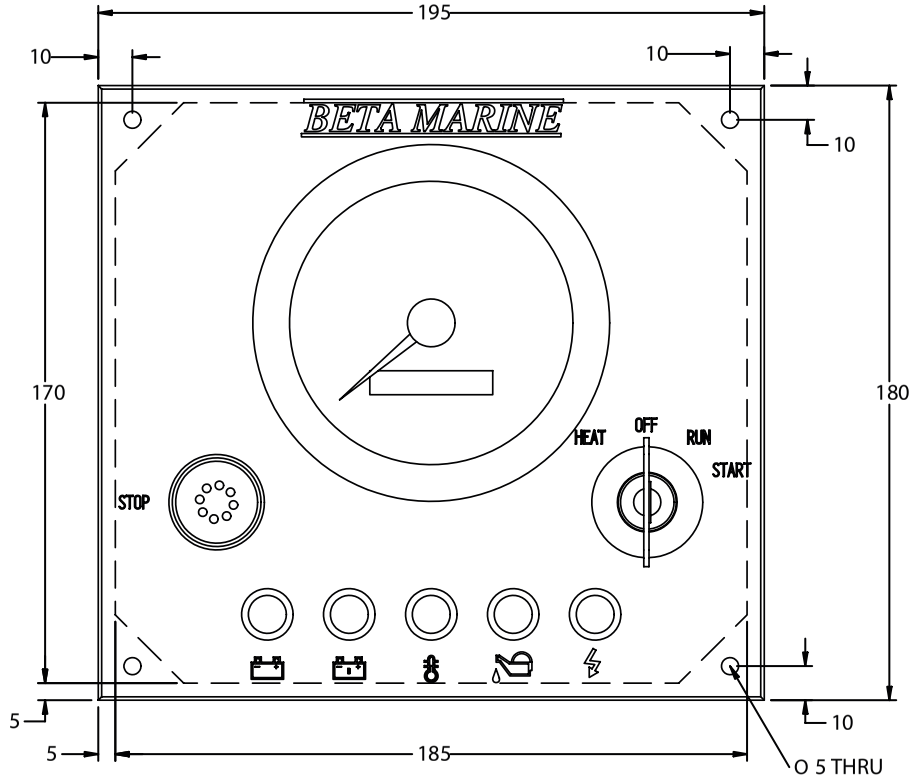

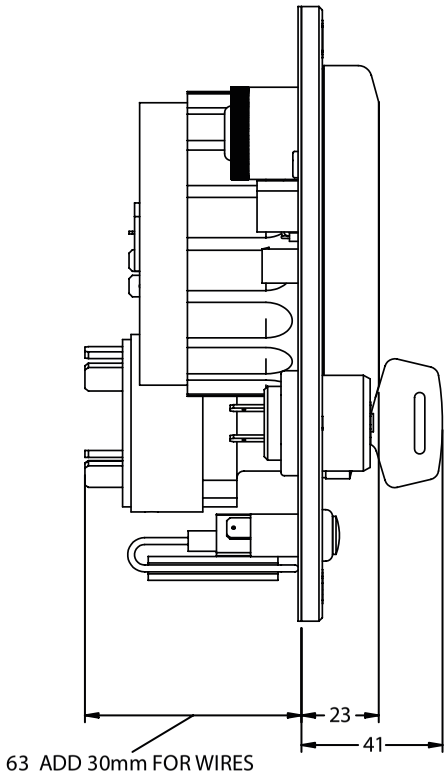

REV	DESCRIPTION	DATE	APP'D	DRAWN
01	CHANGED KEY SWITCH	05/09/08	LT	TW

NOTES

TITLE: AB PANEL

DIMENSIONS IN MM (INCH) DO NOT SCALE

MATL:

BETA MARINE

TEL +44 (0)1452 723492 FAX +44 (0)1452 883742

BETA MARINE LTD.
DAVY WAY, WATERWELLS,
QUEDGELEY, GLOUCESTER
GL2 2AD UK

DRAWN BY:-	TW	SIZE	A4	DWG NO.	200-06304	REV	01
CHECKED BY:-	LT	SCALE	NTS	PAGE	2 of 2	DATE	05/10/2007

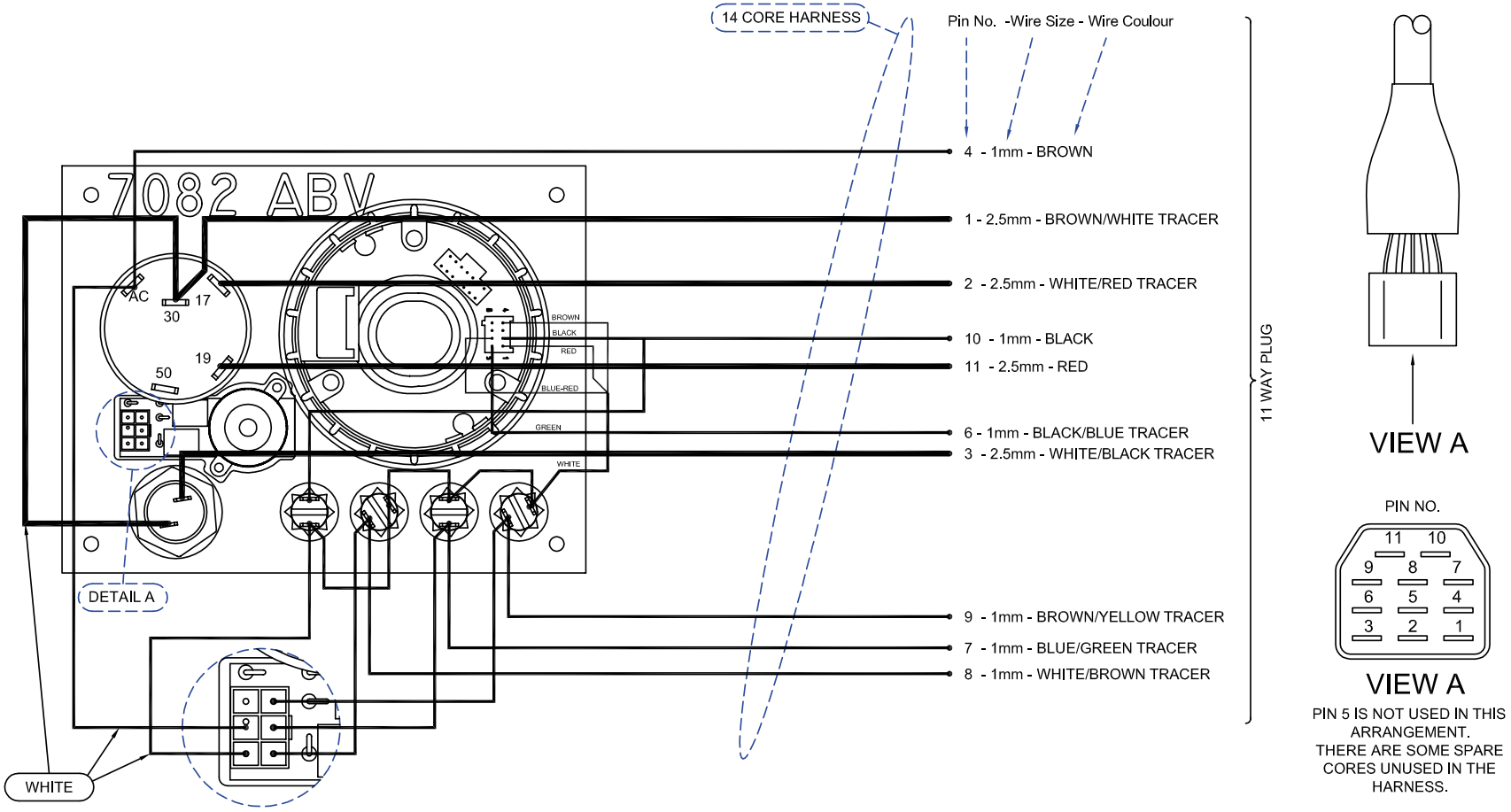

REV	DESCRIPTION	DATE	APP'D	DRAWN
01	TACHO	22/04/11	DM	LTJ#

NOTES

FOR PART LIST AND PANEL SIZE SEE DRAWING 200-06320
PANEL PART NUMBER 200-89421
THIS EXCLUDES TACHO

DIMENSIONS IN MM (INCH)
DO NOT SCALE

TITLE

WIRING SCHEMATIC FOR
ABV PANEL
AFTER MAY 2011

BETA MARINE
BETA MARINE LTD.
DAVY WAY, WATERWELLS,
QUEDGELEY, GLOUCESTER
GL2 2AD UK
TEL +44 (0)1452 723492 FAX +44 (0)1452 883742

DRAWN BY:–	SIZE	DWG NO.	REV
TW	A4	200-06519	01
CHECKED BY:– DM	SCALE N/A	PAGE 1 of 1	DATE 22/04/11

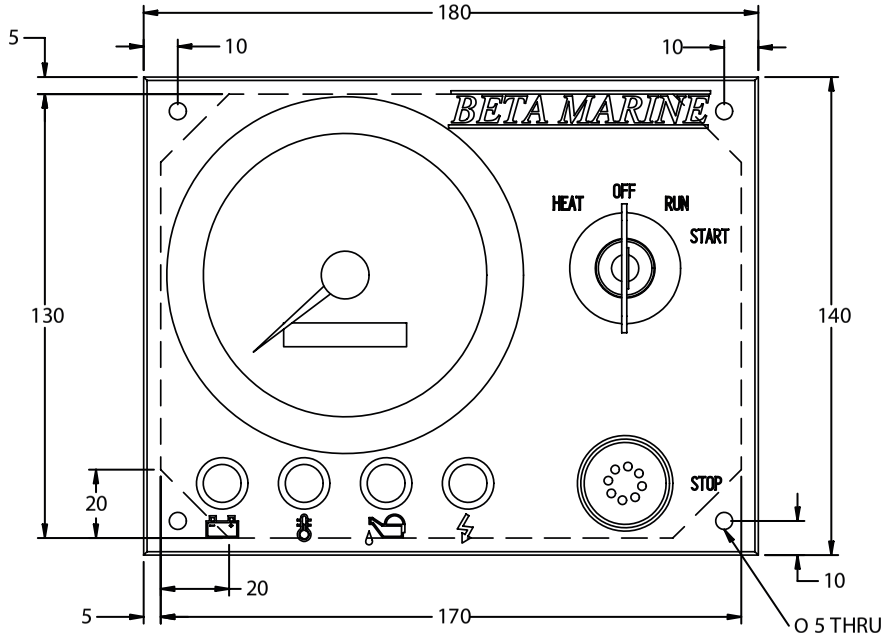

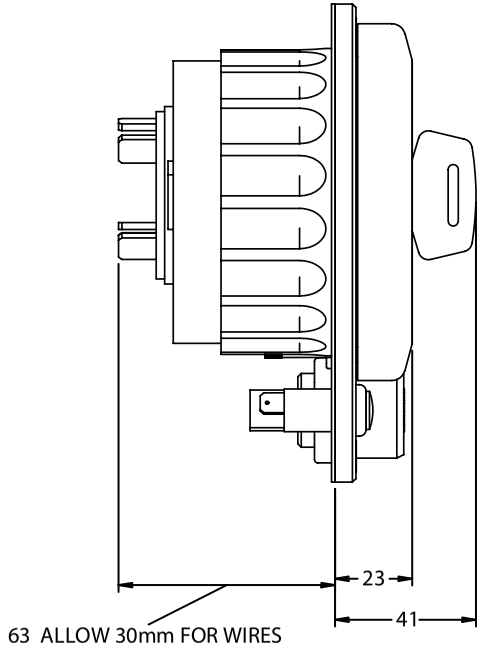

REV	DESCRIPTION	DATE	APP'D	DRAWN
01	CHANGED KEY SWITCH	05/09/08	LT	TW

NOTES

DIMENSIONS IN MM (INCH) DO NOT SCALE

MATL:

TITLE: ABV PANEL

BETA MARINE

TEL +44 (0)1452 723492 FAX +44 (0)1452 883742

BETA MARINE LTD.
DAVY WAY, WATERWELLS,
QUEDGELEY, GLOUCESTER
GL2 2AD UK

DRAWN BY:- timw
CHECKED BY:- LT

SIZE A4 | DWG NO. 200-06320/01 | REV 00

SCALE NTS | PAGE 2 of 2 | DATE 05/10/2007

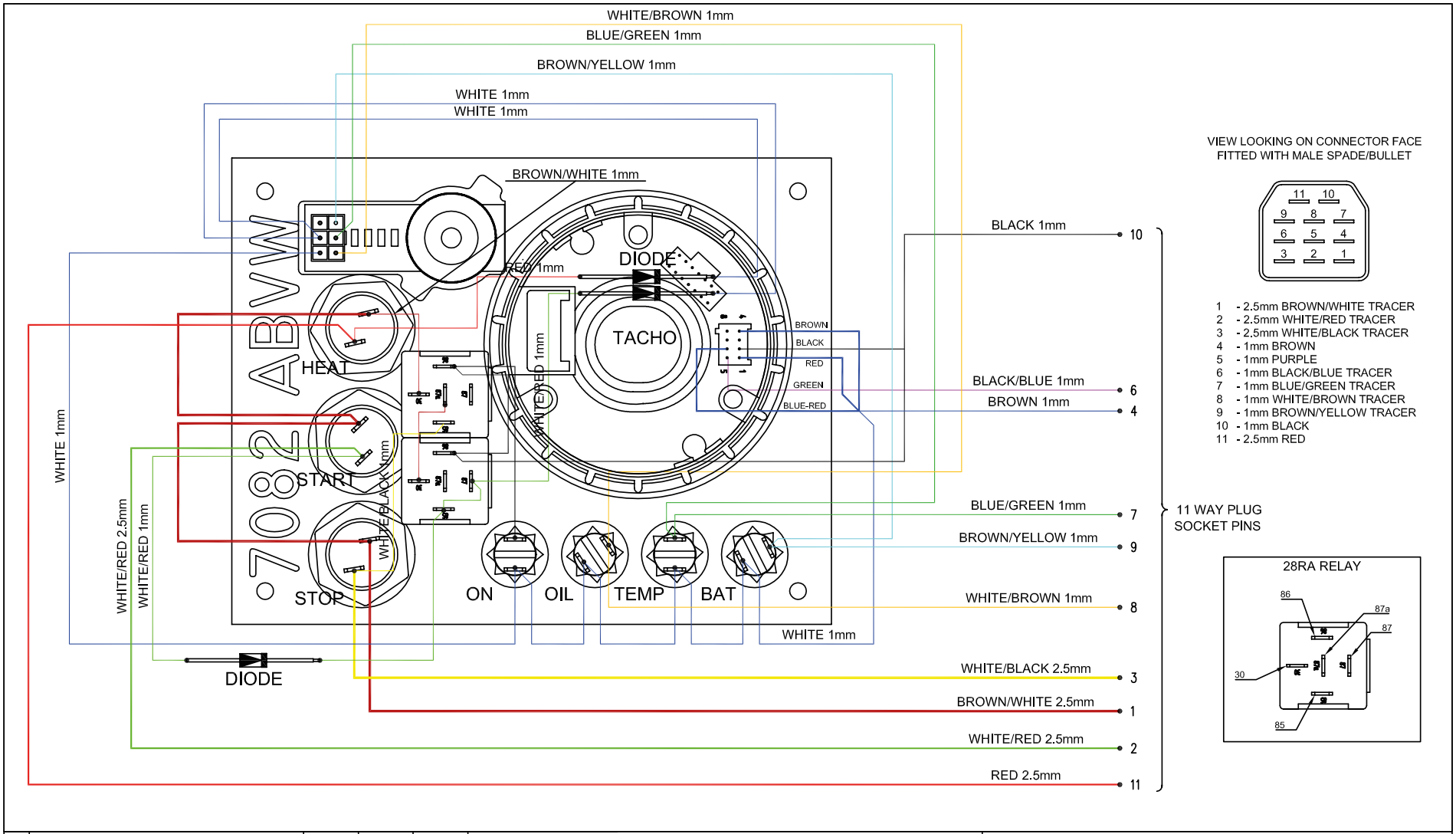

REV	DESCRIPTION	DATE	APP'D	DRAWN
01	WIRE COLOURS	15/10/04	DM	TW
02	MOVED BROWN/YELLOW WIRE	20/01/06	DM	TW
03	TACHO	22/04/11	DM	TW

NOTES

DIMENSIONS IN MM (INCH)
DO NOT SCALE

TITLE

WIRING SCHEMATIC FOR
ABVW PANEL

BETA MARINE

TEL +44 (0)1452 723492 FAX +44 (0)1452 883742

BETA MARINE LTD.
DAVY WAY, WATERWELLS,
QUEDGELEY, GLOUCESTER
GL2 2AD UK

DRAWN BY:–	SIZE	DWG NO.	REV
TW	A4	100-06333	02
CHECKED BY:– DM	SCALE N/A	PAGE 1 of 1	DATE 03/12/04

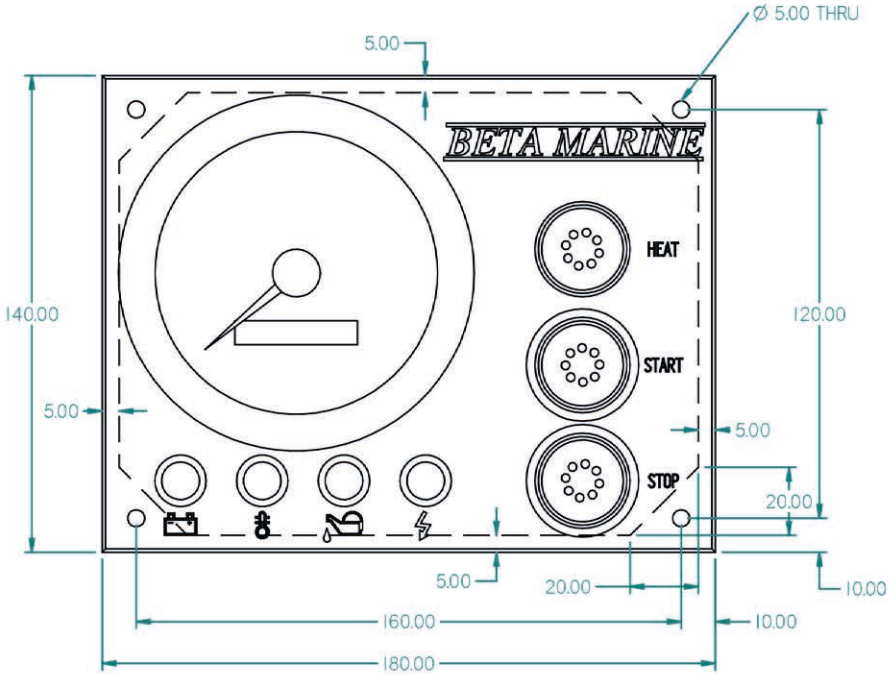

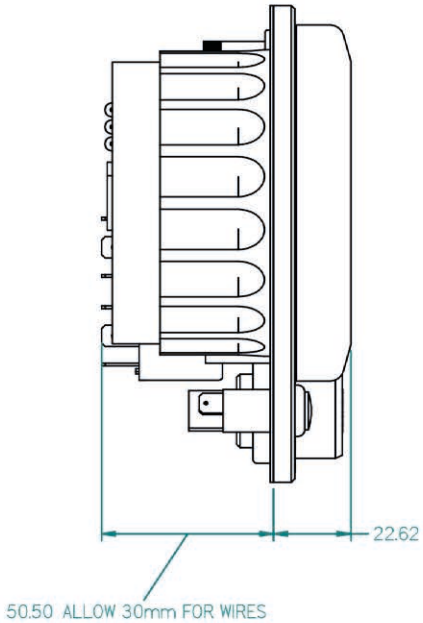

REV	DESCRIPTION	DATE	APP'D	DRAWN
01				

NOTES

DIMENSIONS IN MM (INCH) DO NOT SCALE

MATL:

TITLE

ABVW
WATERPROOF PANEL

BETA MARINE

TEL +44 (0)1452 723492 FAX +44 (0)1452 883742

BETA MARINE LTD.
DAVY WAY, WATERWELLS,
QUEDGELEY, GLOUCESTER
GL2 2AD UK

DRAWN BY:-	TW	SIZE	A4	DWG NO.	200-06331	REV	00
CHECKED BY:-	LT	SCALE	NTS	PAGE	2 of 2	DATE	19/03/2014

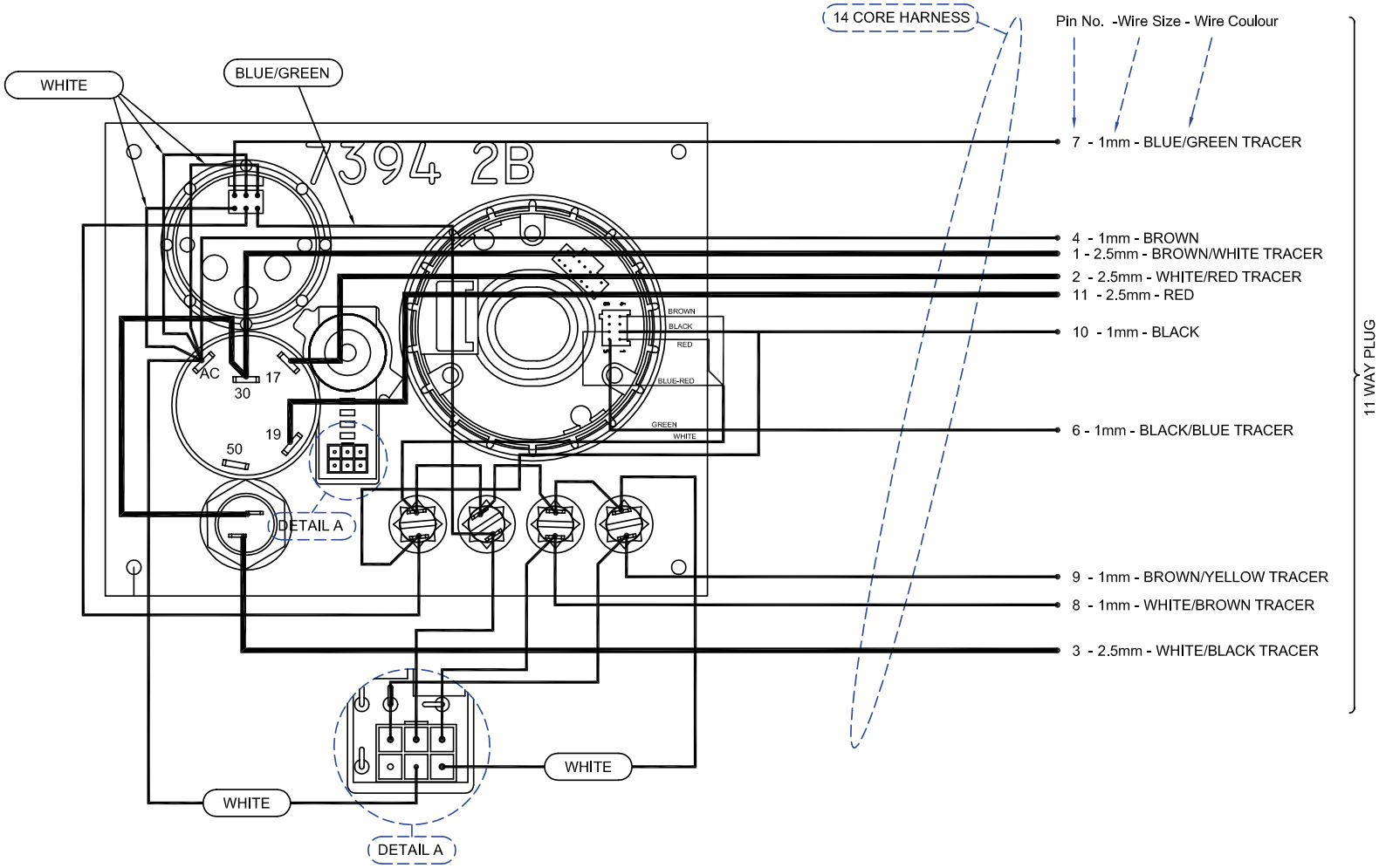

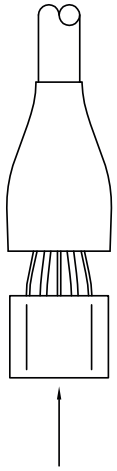

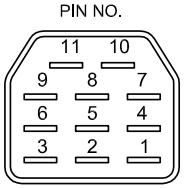

VIEW A

PIN 5 IS NOT USED IN THIS ARRANGEMENT.
THERE ARE SOME SPARE CORES UNUSED IN THE HARNESS.

REV	DESCRIPTION	DATE	APP'D	DRAWN
0.1	TACHO	22/04/11	DM	TW

NOTES

TITLE

WIRING SCHEMATIC FOR
B PANEL
AFTER MAY 2011

DIMENSIONS IN MM (INCH)
DO NOT SCALE

BETA MARINE

BETA MARINE LTD.
DAVY WAY, WATERWELLS,
QUEDGELEY, GLOUCESTER
GL2 2AD UK

TEL +44 (0)1452 723492 FAX +44 (0)1452 883742

DRAWN BY:–	SIZE	DWG NO.	REV
TW	A4	200-06520	01
CHECKED BY:– DM	SCALE N/A	PAGE 1 of 1	DATE 16/05/05

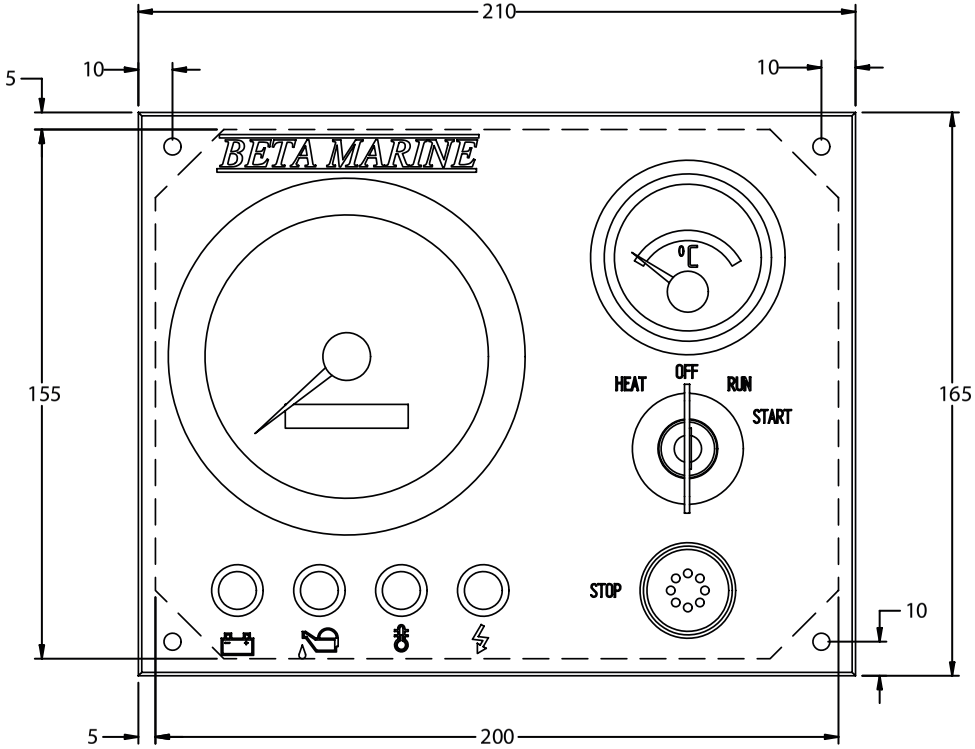

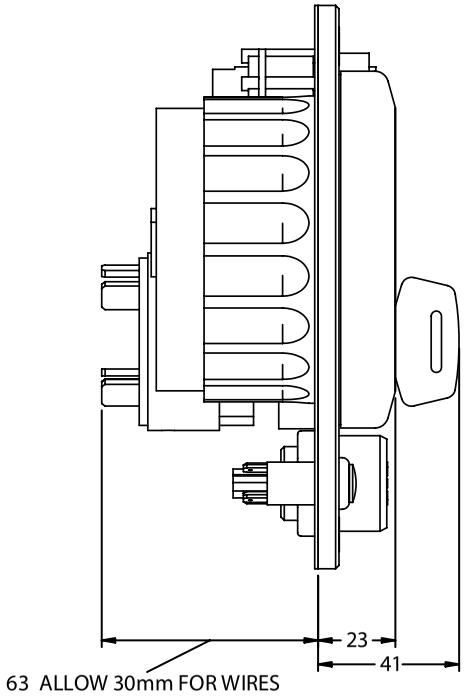

REV	DESCRIPTION	DATE	APP'D	DRAWN
01	CHANGED KEY SWITCH	05/09/08	LT	TW

NOTES

DIMENSIONS IN MM (INCH) DO NOT SCALE

MATL:

TITLE: B PANEL

BETA MARINE

TEL +44 (0)1452 723492 FAX +44 (0)1452 883742

BETA MARINE LTD.
DAVY WAY, WATERWELLS,
QUEDGELEY, GLOUCESTER
GL2 2AD UK

DRAWN BY:-	TW	SIZE	A4	DWG NO.	200-06303	REV	01
CHECKED BY:-	LT	SCALE	NTS	PAGE	2 of 2	DATE	05/10/2007

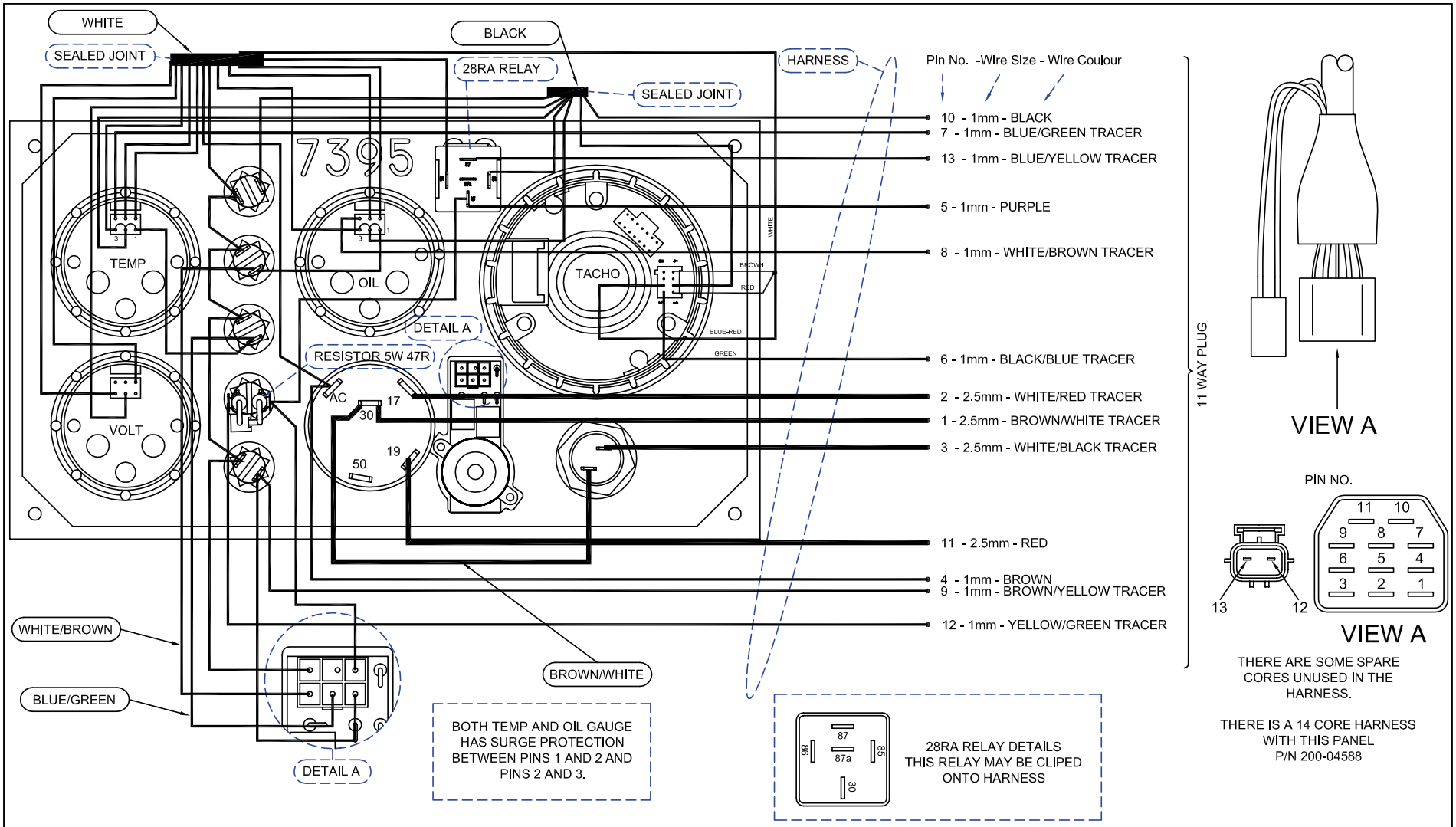

REV	DESCRIPTION	DATE	APP'D	DRAWN
01	CHANGED WHITE & BLACK AROUND	19/09/05	DM	TW
02	TACHO AND DOMESTIC WIRES	22/04/11	DM	TW

NOTES

FOR PART LIST AND PANEL SIZE SEE DRAWING 200-06306
PANEL PART NUMBER 200-05445
(THIS EXCLUDES GAUGES)

DIMENSIONS IN MM (INCH) DO NOT SCALE

TITLE

WIRING SCHEMATIC FOR
C PANEL (DELUXE)
AFTER MAY 2011

BETA MARINE

BETA MARINE LTD.
DAVY WAY, WATERWELLS,
QUEDGELEY, GLOUCESTER
GL2 2AD UK

TEL +44 (0)1452 723492 FAX +44 (0)1452 883742

DRAWN BY:–	SIZE	DWG NO.	REV
TW	A4	200-06518	02
CHECKED BY:– DM	SCALE N/A	PAGE 1 of 1	DATE 15/05/05

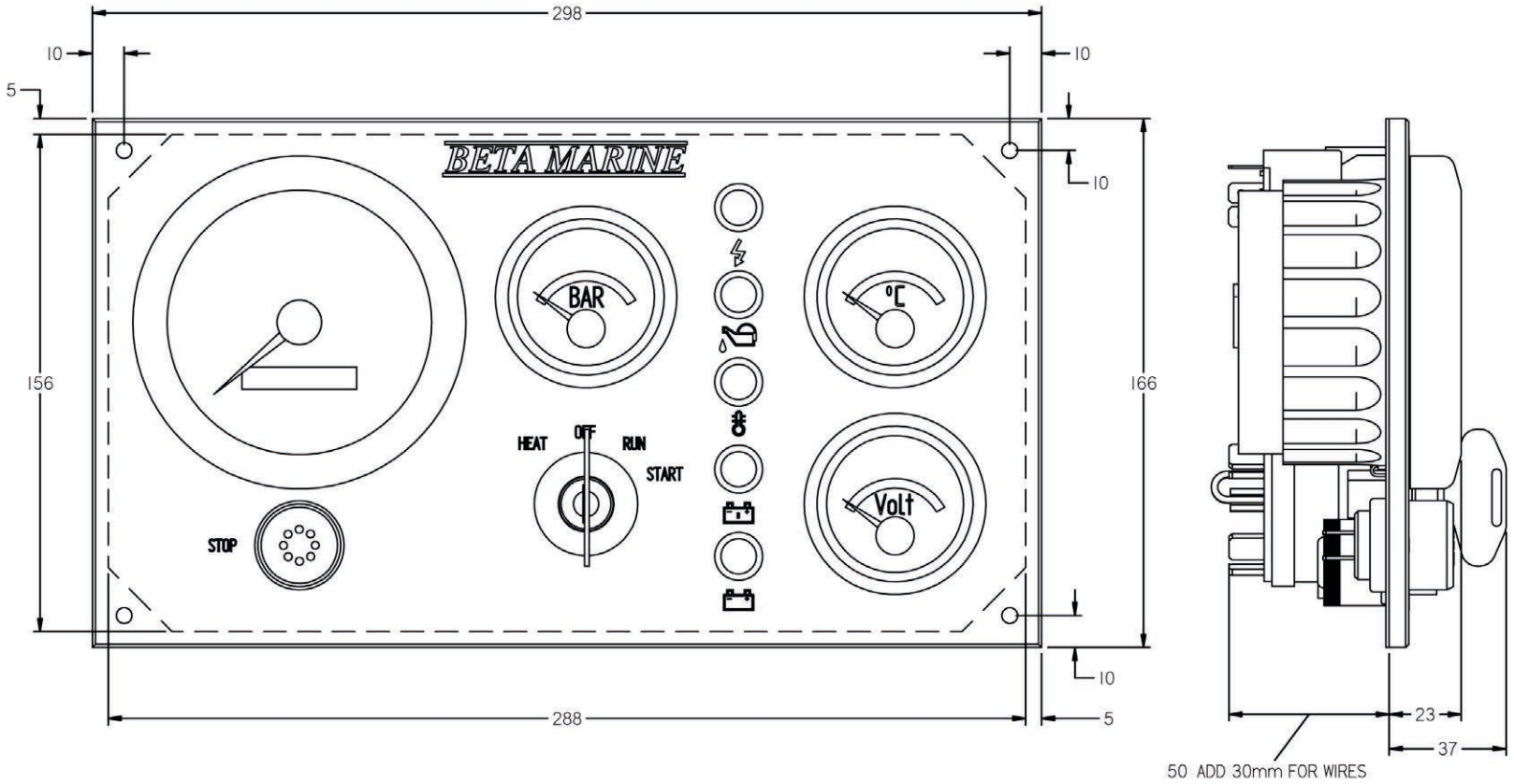

REV	DESCRIPTION	DATE	APP'D	DRAWN
01				

NOTES

TITLE: C PANEL

DIMENSIONS IN MM (INCH) DO NOT SCALE

MATL:

BETA MARINE

TEL +44 (0)1452 723492 FAX +44 (0)1452 883742

BETA MARINE LTD.
DAVY WAY, WATERWELLS,
QUEDGELEY, GLOUCESTER
GL2 2AD UK

DRAWN BY:- TW	SIZE A4	DWG NO. 200-06306		REV 01	
CHECKED BY:- LT	SCALE NTS	PAGE 2 of 2		DATE 12/08/2009	

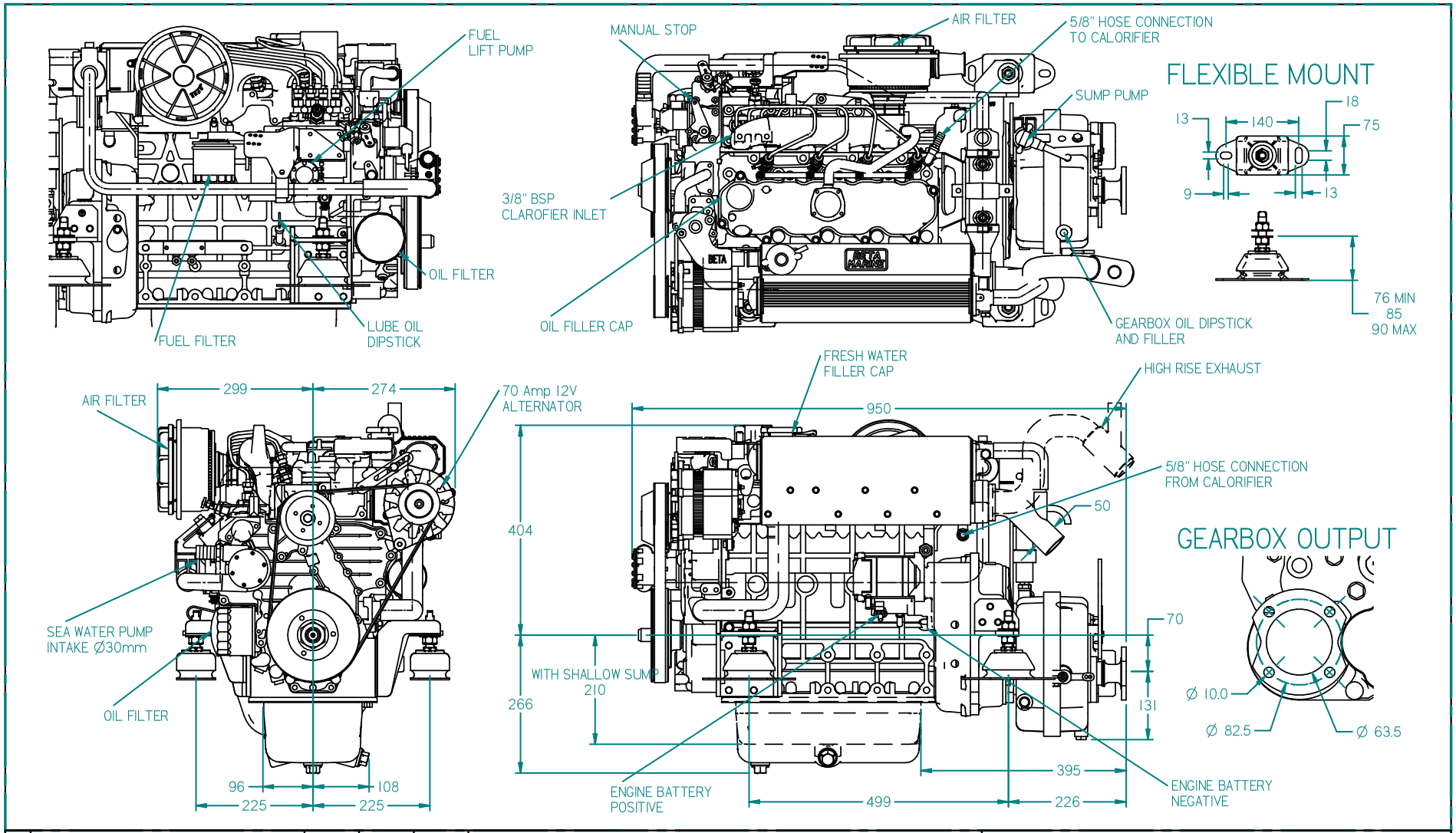

REV	DESCRIPTION	DATE	APP'D	DRAWN
01				

NOTES

TITLE:

BETA 43-50 HEAT EXCHANGE
PRM150 GEARBOX

DIMENSIONS IN MM (INCH) DO NOT SCALE

PART FILE NAME: BETA 43 HE PRM150.asm

BETA MARINE

TEL: (01452) 723492 FAX: (01452) 729916

BETA MARINE LTD, DAVY WAY, WATERWELLS, QUEDGELEY, GLOUCESTER. GL2 2AD, UK

DRAWN BY:	SIZE	DWG NO:	REV
TW	A4	100-05199	02
CHECKED BY: LT	SCALE NTS	PAGE 1 of 2	DATE 24/03/2014

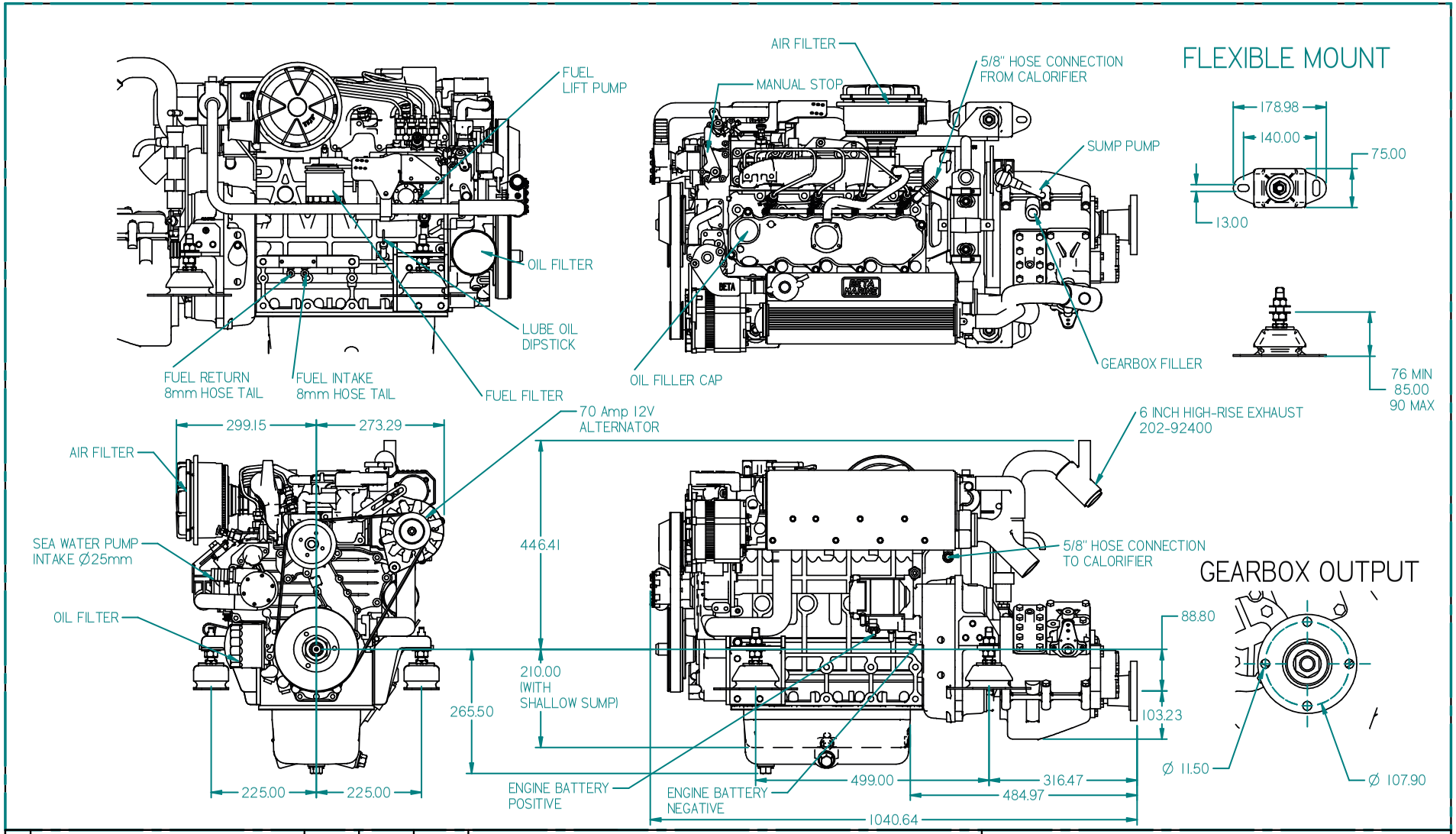

REV	DESCRIPTION	DATE	APP'D	DRAWN
01				

NOTES

TITLE:

B43/B50/B60 HEAT EXCHANGE
PRM280 GEARBOX

DIMENSIONS IN MM (INCH) DO NOT SCALE

PART FILE NAME: 100-10695 -01.asm

BETA MARINE

TEL: (01452) 723492 FAX: (01452) 729916

BETA MARINE LTD, DAVY WAY, WATERWELLS, QUEDGELEY, GLOUCESTER. GL2 2AD, UK

DRAWN BY:	SIZE	DWG NO:	REV
JLT	A4	100-10695	01
CHECKED BY: TW	SCALE NTS	PAGE 1 of 1	DATE 05/10/2016

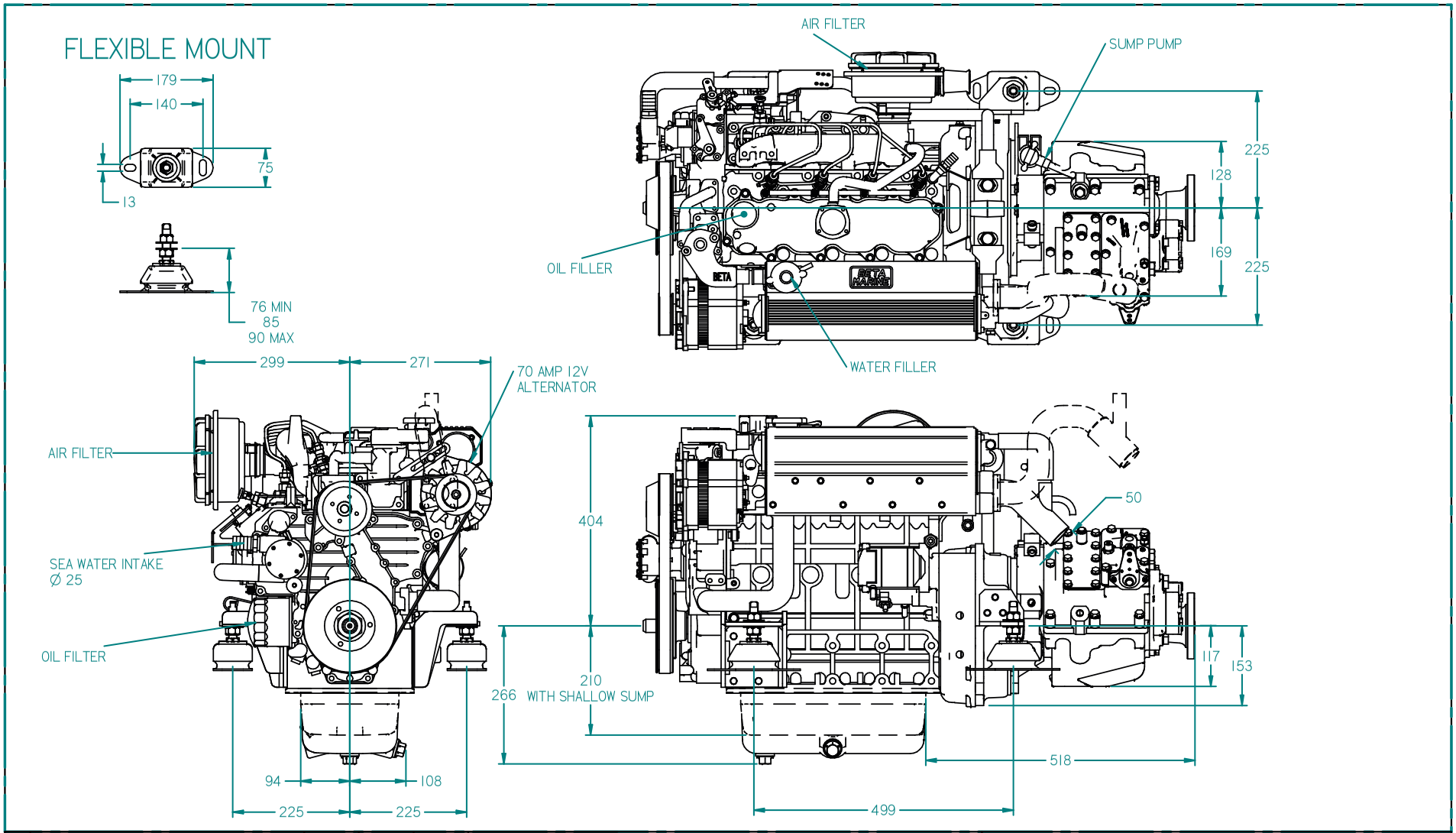

REV	DESCRIPTION	DATE	APP'D	DRAWN
01				

NOTES

TITLE:

BETA43 AND 50 HEAT EXCHANGE
PRM280C GEARBOX

DIMENSIONS IN MM (INCH)
DO NOT SCALE

PART FILE NAME: 100-09013 BETA43-50 HE PRM260C.asm

BETA MARINE

TEL: (01452) 723492 FAX: (01452) 729916

BETA MARINE LTD,
DAVY WAY,
WATERWELLS,
QUEDGELEY,
GLOUCESTER. GL2 2AD, UK

DRAWN BY:	SIZE	DWG NO:	REV
TW	A4	100-09013	01
CHECKED BY: LT	SCALE NTS	PAGE 1 of 1	DATE 19/03/2014

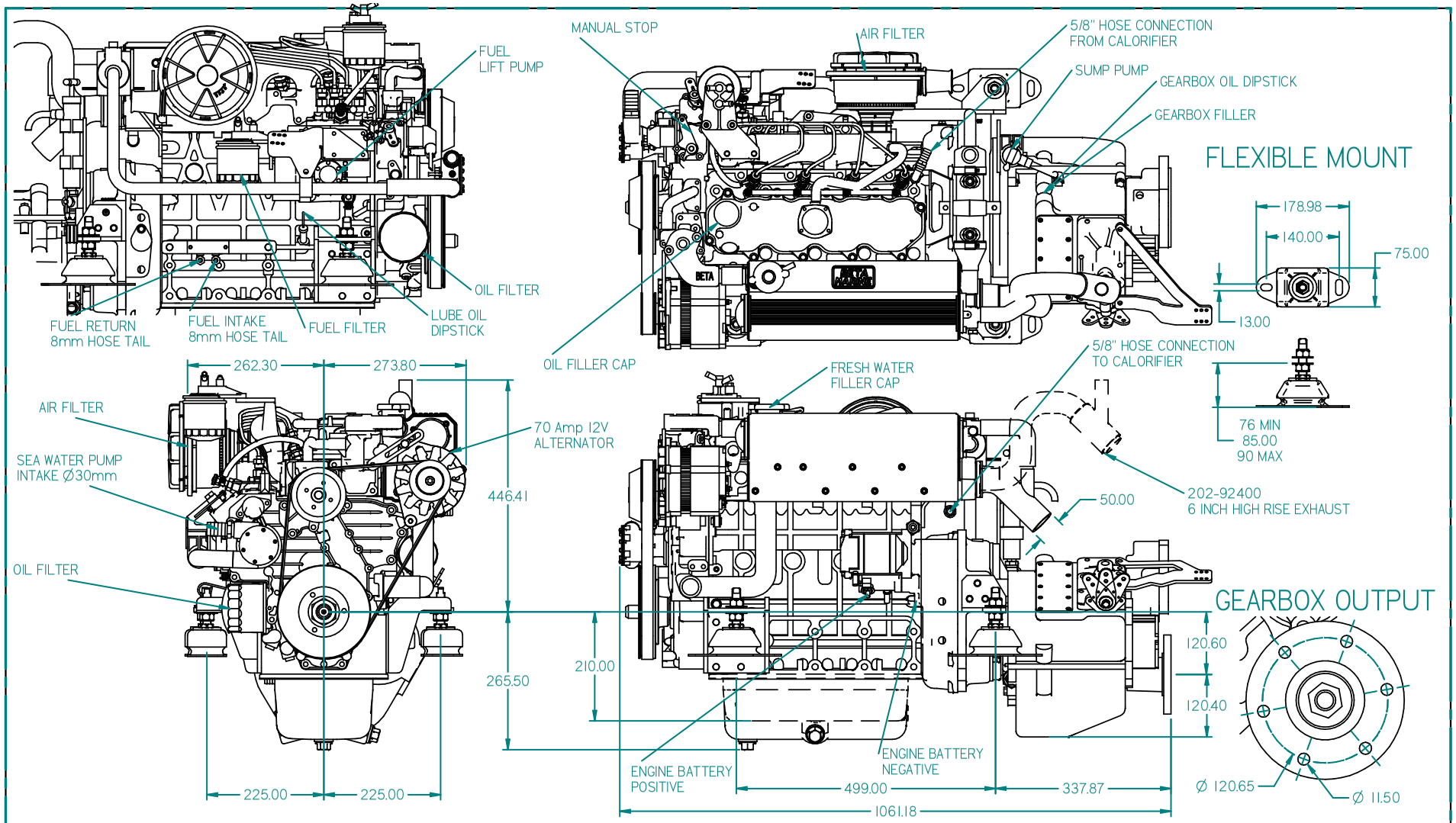

REV	DESCRIPTION	DATE	APP'D	DRAWN
01				

NOTES

TITLE:

BETA 43-50-60 HEAT EXCHANGE PRM 500 GEARBOX

DIMENSIONS IN MM (INCH) DO NOT SCALE

PART FILE NAME: BETA 43-50 HE PRM500 100-09026.asm

BETA MARINE

TEL: (01452) 723492 FAX: (01452) 729916

BETA MARINE LTD, DAVY WAY, WATERWELLS, QUEDGELEY, GLOUCESTER. GL2 2AD, UK

DRAWN BY:	TW	SIZE	A4	DWG NO:	100-09026	REV	00
CHECKED BY:	LT	SCALE	NTS	PAGE	1 of 1	DATE	19/03/2014

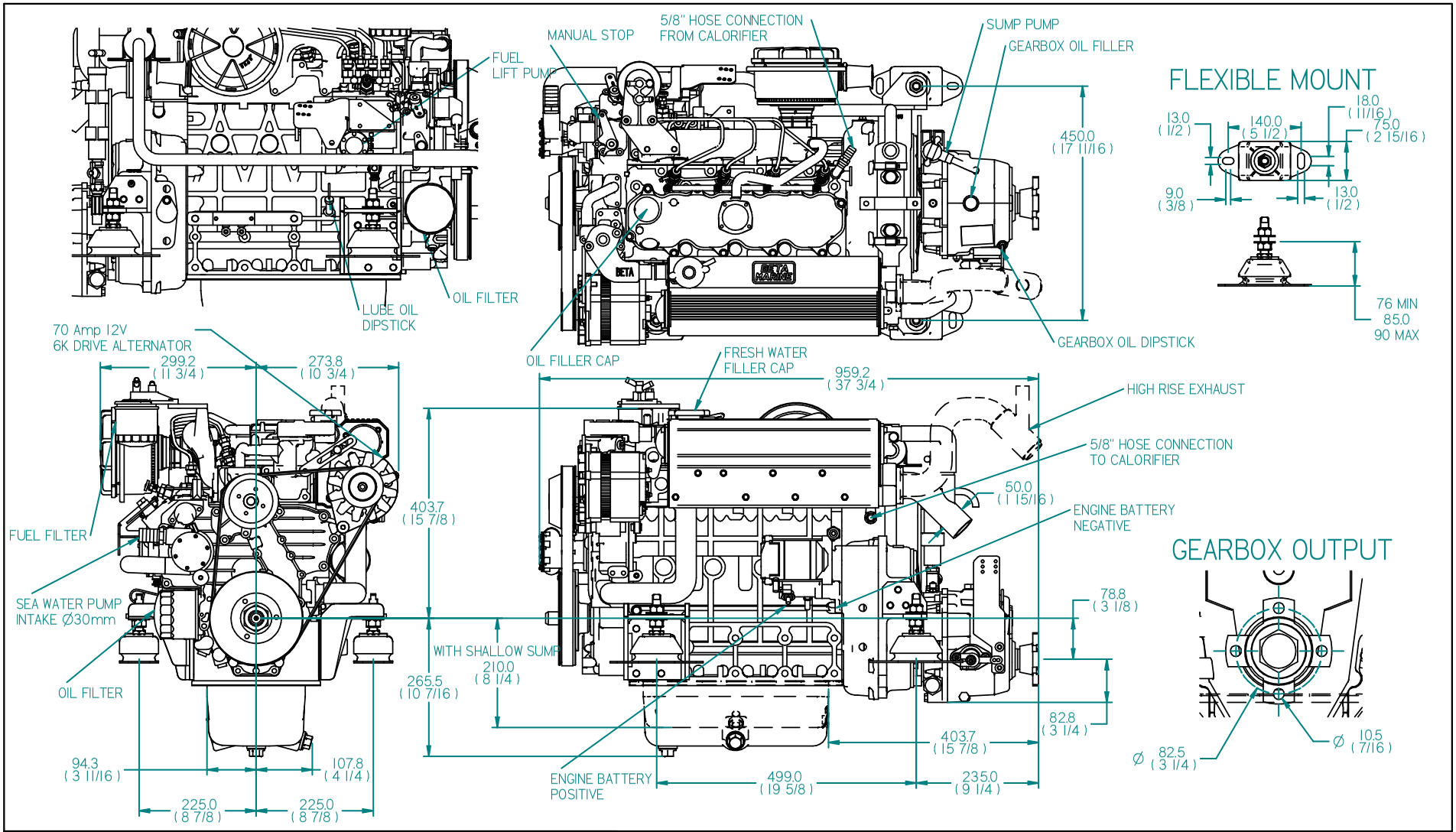

REV	DESCRIPTION	DATE	APP'D	DRAWN
01				

NOTES

TITLE:

BETA 43/50 (BV2003-BV2203)
HEAT EXCHANGE TMC60 GEARBOX

DIMENSIONS IN MM (INCH) DO NOT SCALE

PART FILE NAME: 100-08616 BETA 43 (BV2003) TMC60.asm

BETA MARINE

TEL: (01452) 723492 FAX: (01452) 729916

BETA MARINE LTD, DAVY WAY, WATERWELLS, QUEDGELEY, GLOUCESTER. GL2 2AD, UK

DRAWN BY: TW

CHECKED BY: LT

SIZE A4

DWG NO: 100-08616

REV 02

SCALE NTS

PAGE 1 of 5

DATE 19/03/2014

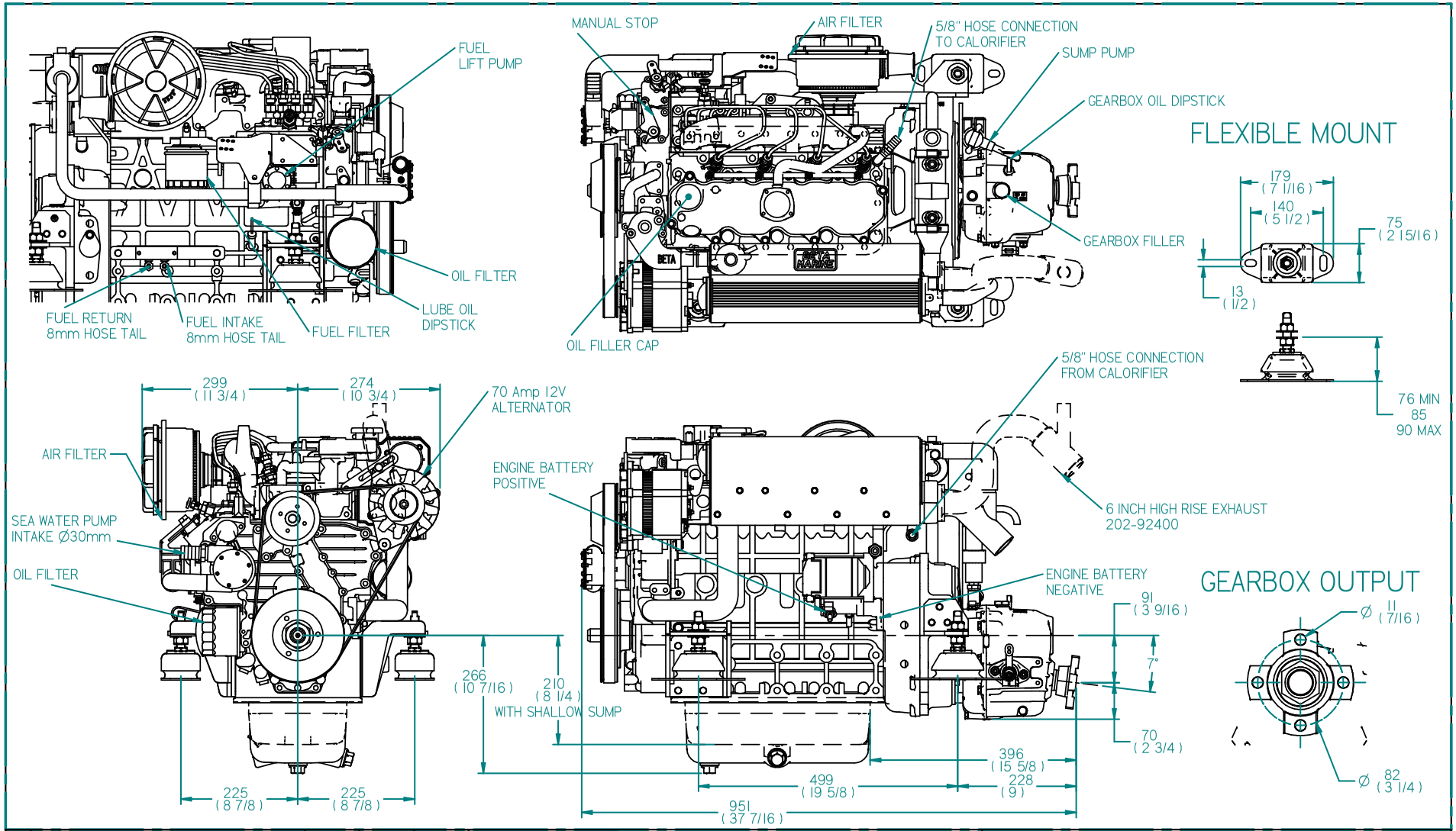

REV	DESCRIPTION	DATE	APP'D	DRAWN
01	New sea water pipe	06/11/10	LT	TW

NOTES

TITLE:

BETA 43 HEAT EXCHANGE TMC60A GEARBOX

DIMENSIONS IN MM (INCH) DO NOT SCALE

PART FILE NAME: 100-09087 B43 HE TMC60A.asm

BETA MARINE

TEL: (01452) 723492 FAX: (01452) 729916

BETA MARINE LTD, DAVY WAY, WATERWELLS, QUEDGELEY, GLOUCESTER. GL2 2AD, UK

DRAWN BY:	TW	SIZE	A4	DWG NO:	100-09087	REV	00
CHECKED BY:	LT	SCALE	NTS	PAGE	1 of 1	DATE	19/03/2014

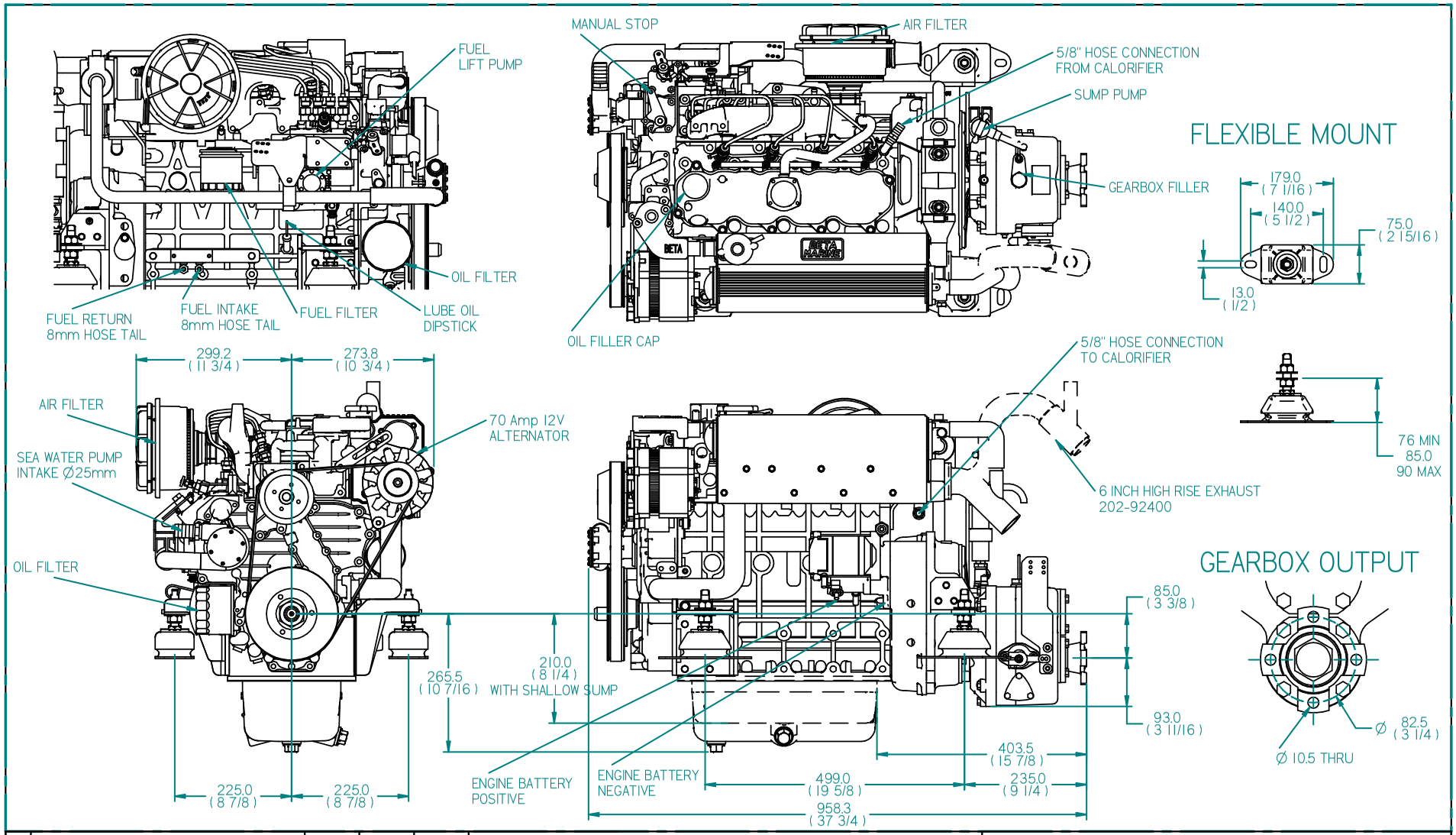

REV	DESCRIPTION	DATE	APP'D	DRAWN
01	New sea water pipe	06/11/10	LT	TW

NOTES

TITLE:

BETA 43-50 HEAT EXCHANGE TMC260 GEARBOX

DIMENSIONS IN MM (INCH) DO NOT SCALE

PART FILE NAME: 100-05274 BETA50 HE TMC260.asm

BETA MARINE
TEL: (01452) 723492 FAX: (01452) 729916
BETA MARINE LTD, DAVY WAY, WATERWELLS, QUEDGELEY, GLOUCESTER. GL2 2AD, UK

DRAWN BY:	SIZE	DWG NO:	REV
TW	A4	100-05274	01
CHECKED BY: LT	SCALE NTS	PAGE 1 of 2	DATE 19/03/2014

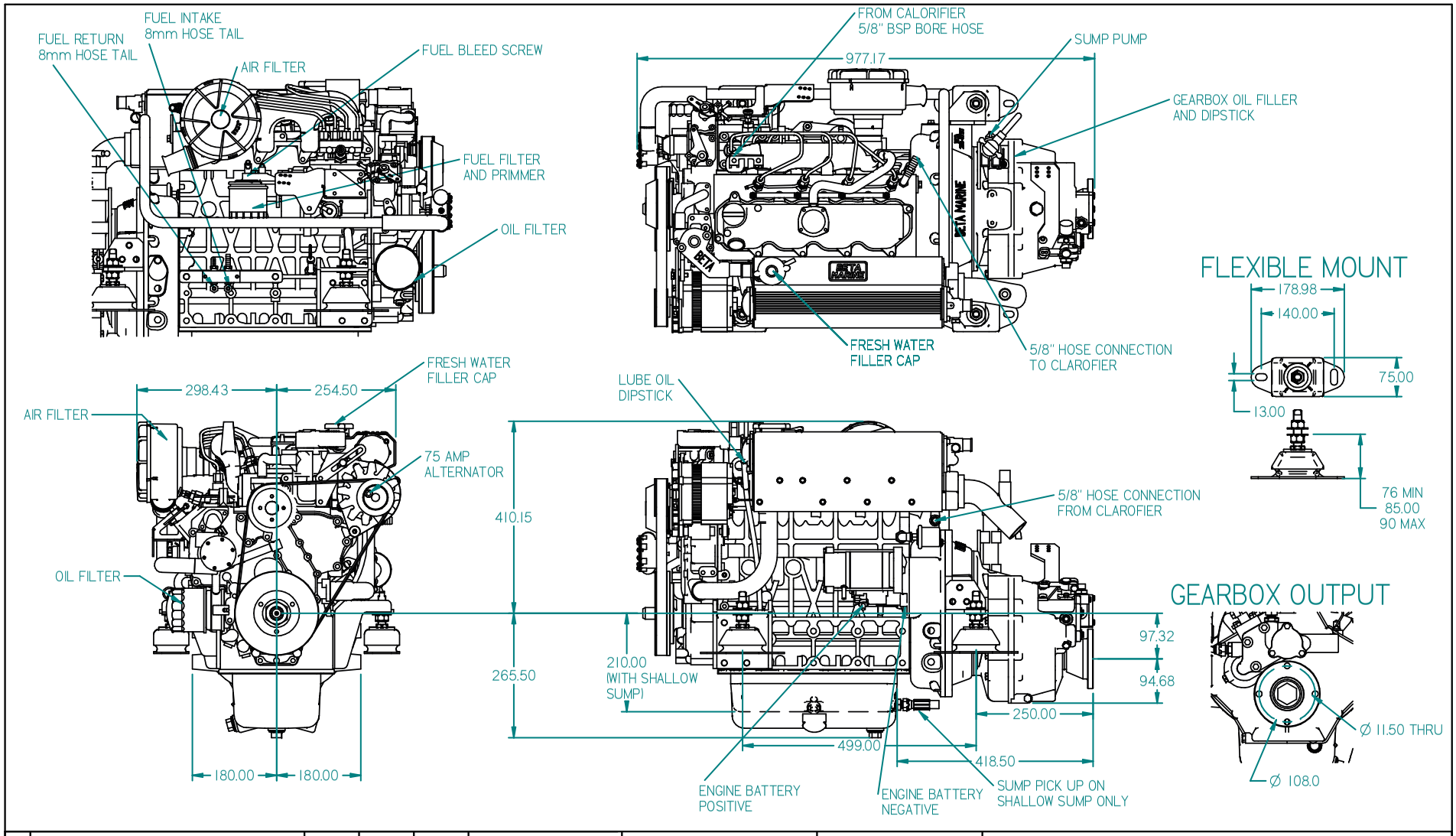

REV	DESCRIPTION	DATE	APP'D	DRAWN
01				

MATL: | FINISH: | UNTOLERANCED DIM'S: ± 0.25

NOTES:

TITLE:

B43/B50/B60 HEAT EXCHANGE TM345 GEARBOX

DIMENSIONS IN MM (INCH) DO NOT SCALE | SCALE: NTS | DATE CREATED: 05/10/2016 | PART FILE NAME: 100-10696-1.dft

BETA MARINE

TEL: (01452) 723492 FAX: (01452) 729916

BETA MARINE LTD, DAVY WAY, WATERWELLS, QUEDGELEY, GLOUCESTER. GL2 2AD, UK

DRAWN BY: JLT | CHECKED BY: TW | SIZE A4 | DWG NO: 100-10696 | REV 1

PART NUMBER: | PAGE 1 of 1

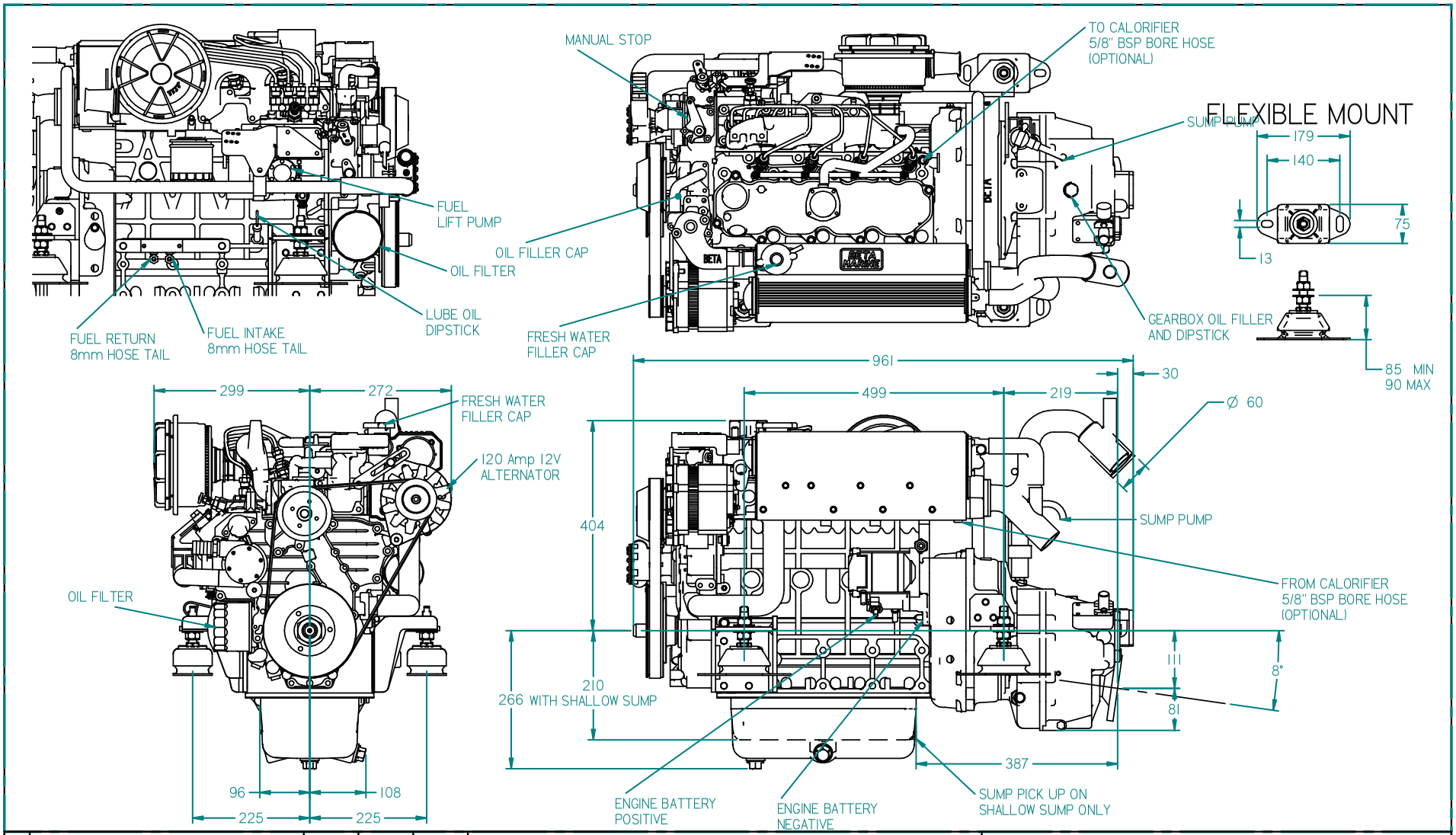

REV	DESCRIPTION	DATE	APP'D	DRAWN
01				

NOTES

TITLE:

BETA 43-50 HEAT EXCHANGE
TM345A GEARBOX

DIMENSIONS IN MM (INCH) DO NOT SCALE

PART FILE NAME: BETA 43-50 HE TM345A 100-09301.asm

BETA MARINE

TEL: (01452) 723492 FAX: (01452) 729916

BETA MARINE LTD, DAVY WAY, WATERWELLS, QUEDGELEY, GLOUCESTER. GL2 2AD, UK

DRAWN BY:	SIZE	DWG NO:	REV
TW	A4	100-09301	00
CHECKED BY: LT	SCALE NTS	PAGE 1 of 1	DATE 19/03/2014

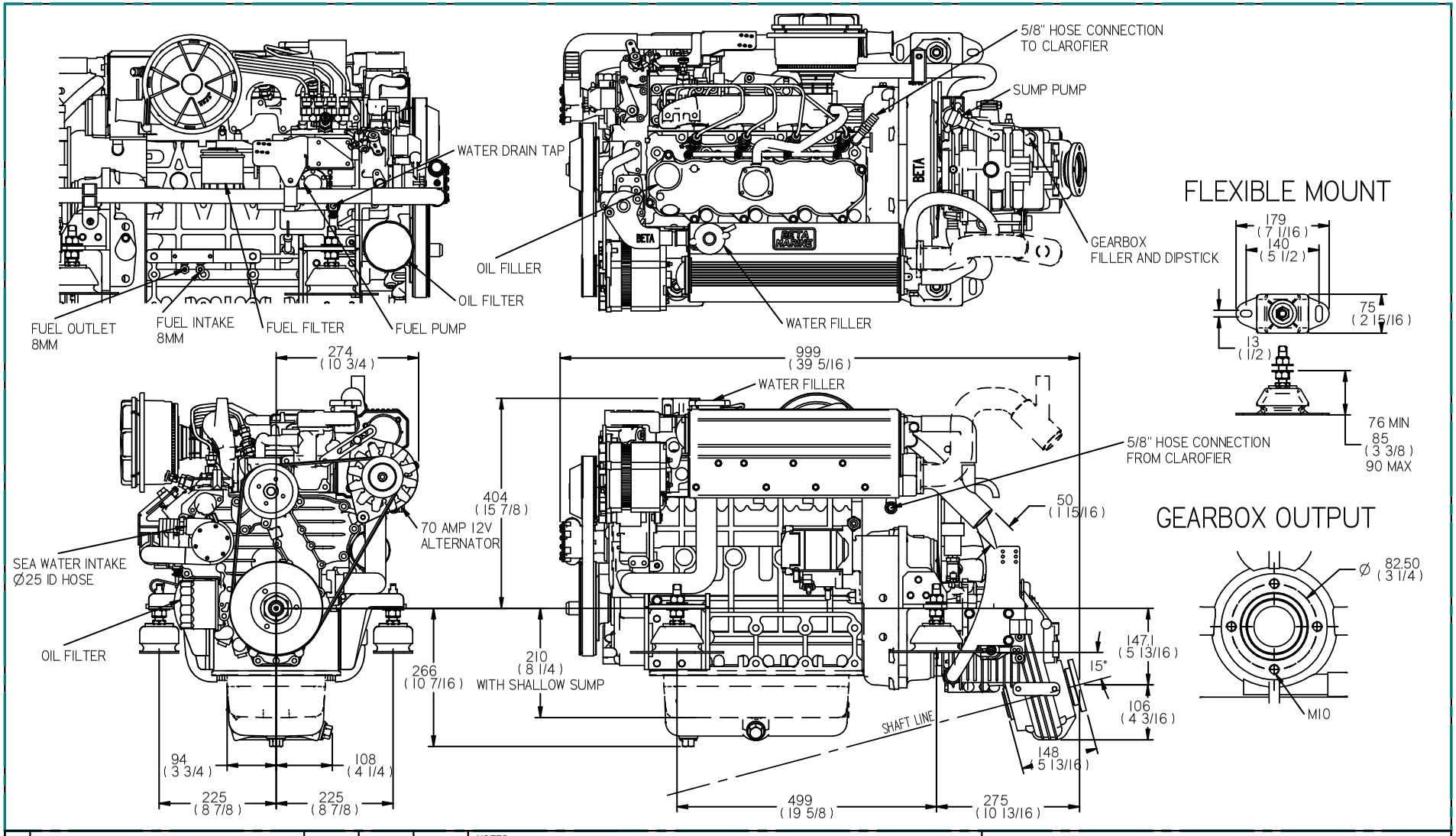

REV	DESCRIPTION	DATE	APP'D	DRAWN
01	NEW WATER PUMP AND G-BOX COOLER	20/07/10	LT	TW

NOTES

TITLE:

BETA 43 AND 50 HEAT EXCHANGE ZF15MIV GEARBOX

DIMENSIONS IN MM (INCH) DO NOT SCALE

PART FILE NAME: 100-06122 BETA 43-50 HE ZF15MIV.asm

BETA MARINE

TEL: (01452) 723492 FAX: (01452) 729916

BETA MARINE LTD, DAVY WAY, WATERWELLS, QUEDGELEY, GLOUCESTER. GL2 2AD, UK

DRAWN BY:	SIZE	DWG NO:	REV
TW	A4	100-06122	02
CHECKED BY: LT	SCALE NTS	PAGE 1 of 1	DATE 19/03/2014

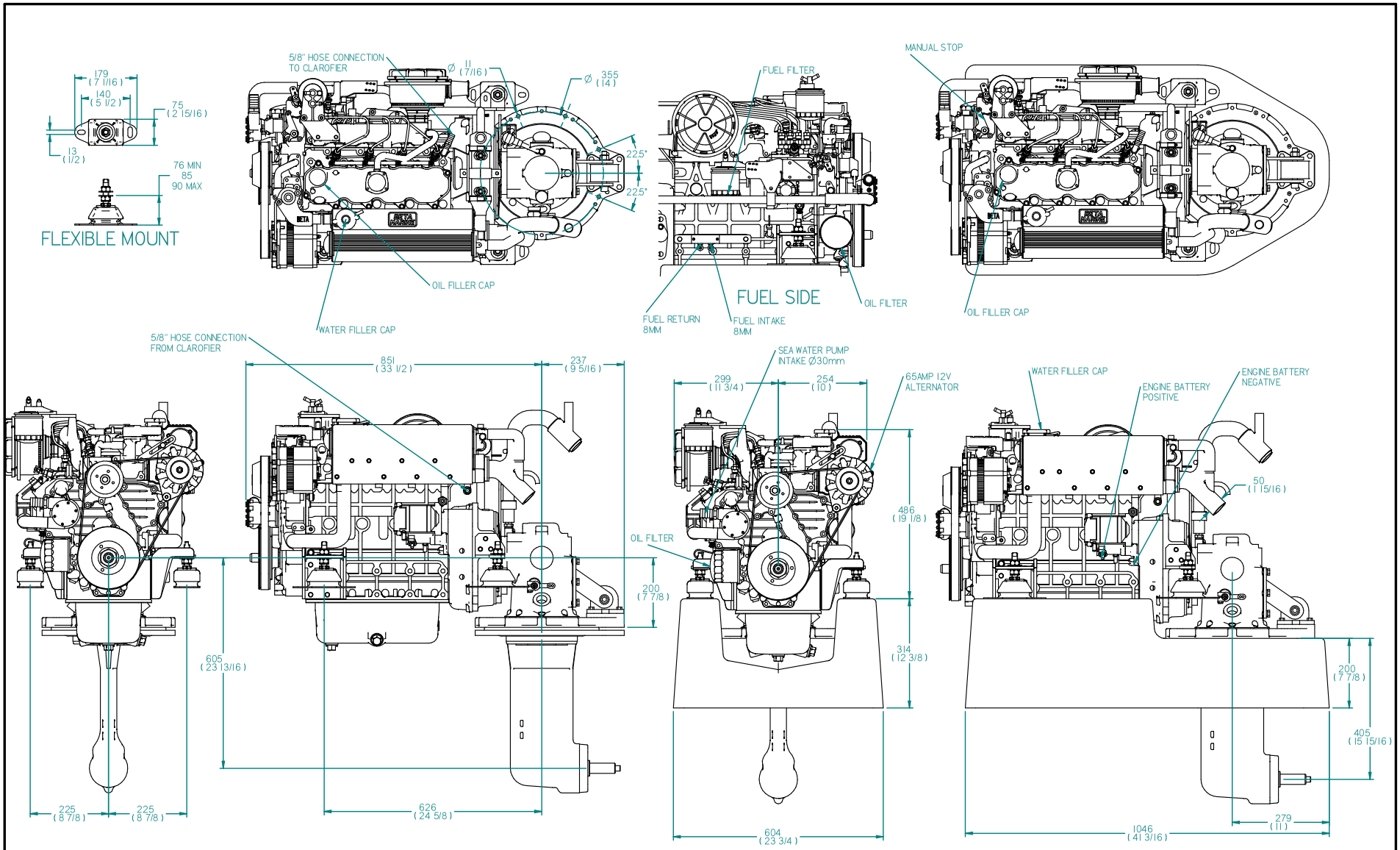

REV	DESCRIPTION	DATE	APP'D	DRAWN
01				

NOTES

TITLE:

BETA43/BETA50 HEAT EXCHANGE
SEA PROP 60

DIMENSIONS IN MM (INCH)
DO NOT SCALE

PART FILE NAME: BD2203 TECHNODRIVE SEA PROP 60.asm

BETA MARINE

TEL: (01452) 723492 FAX: (01452) 729916

BETA MARINE LTD,
DAVY WAY,
WATERWELLS,
QUEDGELEY,
GLOUCESTER. GL2 2AD, UK

DRAWN BY:	TW	SIZE	A3	DWG NO.	100-06614	REV	01
CHECKED BY:	LT	SCALE	NTS	PAGE	1 of 2	DATE	19/03/2014

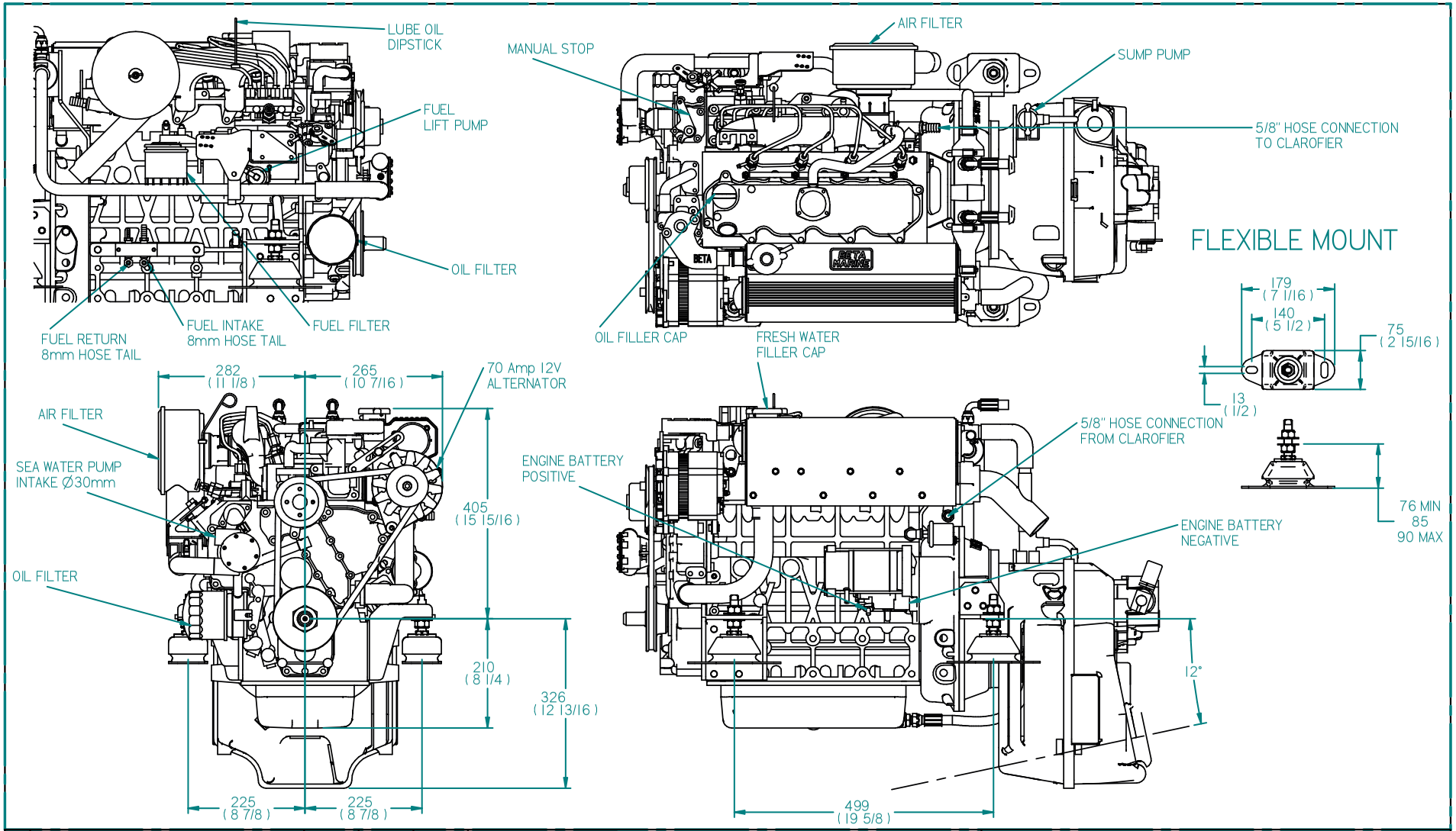

REV	DESCRIPTION	DATE	APP'D	DRAWN
01				

NOTES

TITLE:

BETA 60 HEAT EXCHANGE
ZF63IV GEARBOX

DIMENSIONS IN MM (INCH) DO NOT SCALE

PART FILE NAME: BETA 60 (BV2403) HE ZF63IV 100-09299.asm

BETA MARINE

TEL: (01452) 723492 FAX: (01452) 729916

BETA MARINE LTD, DAVY WAY, WATERWELLS, QUEDGELEY, GLOUCESTER. GL2 2AD, UK

DRAWN BY:	TW	SIZE	A4	DWG NO:	100-09299	REV	00
CHECKED BY:	LT	SCALE	NTS	PAGE	1 of 1	DATE	19/03/2014

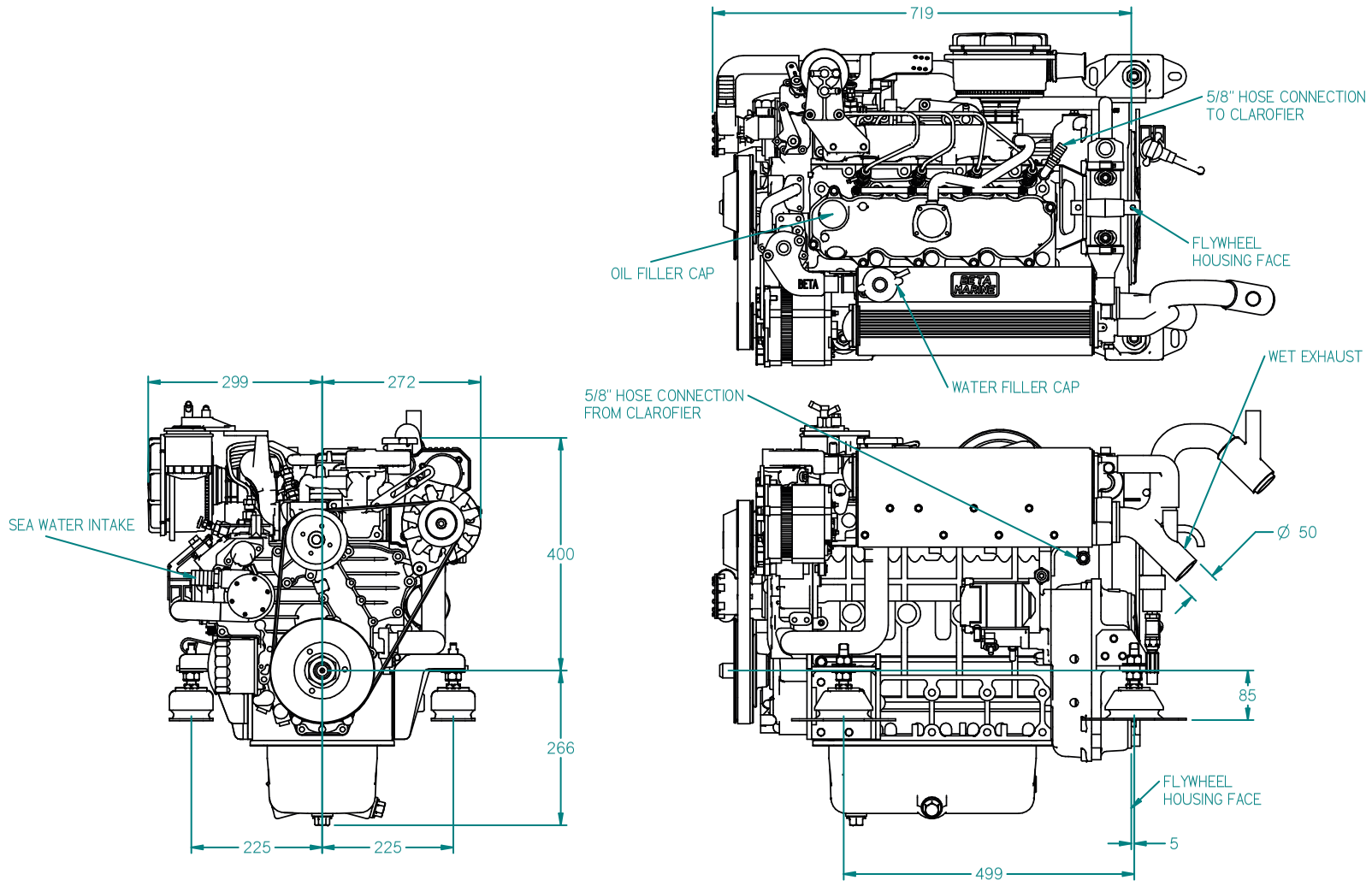

REV	DESCRIPTION	DATE	APP'D	DRAWN
01				

NOTES

TITLE:

BETA 50 HEAT EXCHANGE
BOB TAIL

DIMENSIONS IN MM (INCH)
DO NOT SCALE

PART FILE NAME: 100-09412 B50 HE BOB TAIL.asm

BETA MARINE

TEL: (01452) 723492 FAX: (01452) 729916

BETA MARINE LTD,
DAVY WAY,
WATERWELLS,
QUEDGELEY,
GLOUCESTER. GL2 2AD, UK

DRAWN BY:	TW	SIZE	A4	DWG NO:	100-09412	REV	00
CHECKED BY:	LT	SCALE	NTS	PAGE	1 of 1	DATE	19/03/2014

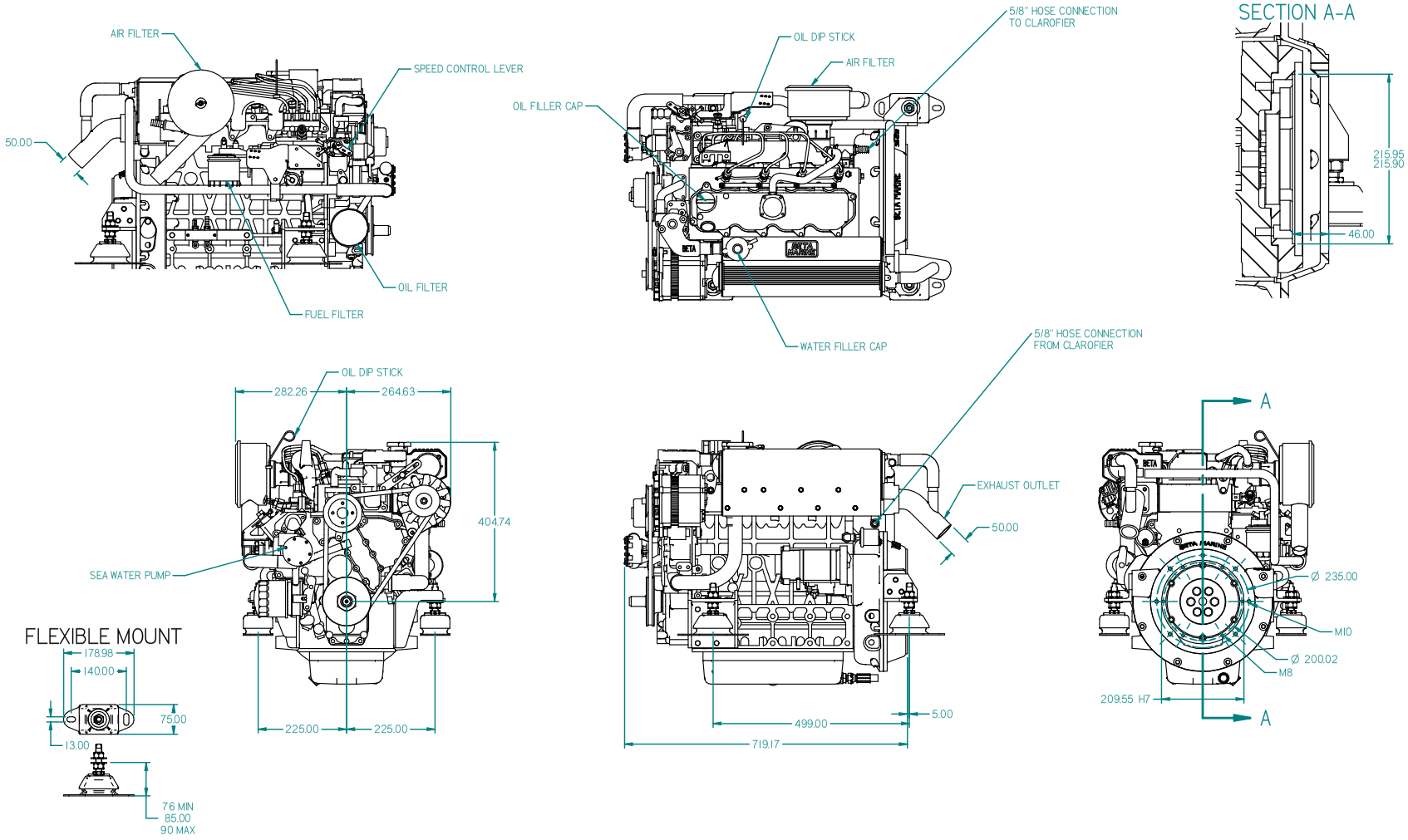

REV	DESCRIPTION	DATE	APP'D	DRAWN
01				

NOTES

TITLE: BETA60 HEAT EXCHANGE BOBTAIL

DIMENSIONS IN MM (INCH) DO NOT SCALE

PART FILE NAME: 100-09815 BETA60 HE BOB TAIL.asm

BETA MARINE

BETA MARINE LTD, DAVY WAY, WATERWELLS, QUEDGELEY, GLOUCESTER. GL2 2AD, UK

TEL: (01452) 723492 FAX: (01452) 729916

DRAWN BY:	TW	SIZE	A3	DWG NO.	100-09815	REV	00
CHECKED BY:	LT	SCALE	NTS	PAGE	1 of 1	DATE	19/03/2014

VIEW LOOKING ON CONNECTOR FACE
FITTED WITH FEMALE SPADE/BULLET

1 - 2.5mm BROWN/WHITE TRACER
2 - 2.5mm WHITE/RED TRACER
3 - 2.5mm WHITE/BLACK TRACER
4 - 1mm BROWN
5 - 1mm PURPLE
6 - 1mm BLACK/BLUE TRACER
7 - 1mm BLUE/GREEN TRACER
8 - 1mm WHITE/BROWN TRACER
9 - 1mm BROWN/YELLOW TRACER
10 - 1mm BLACK
11 - 2.5mm RED
12 - 1mm GREEN/YELLOW TRACER
13 - 1mm BLUE/YELLOW TRACER
14 - 1mm YELLOW

VIEW LOOKING ON CONNECTOR FACE
FITTED WITH MALE SPADE/BULLET

1 - 2.5mm BROWN/WHITE TRACER
2 - 2.5mm WHITE/RED TRACER
3 - 2.5mm WHITE/BLACK TRACER
4 - 1mm BROWN
5 - 1mm PURPLE
6 - 1mm BLACK/BLUE TRACER
7 - 1mm BLUE/GREEN TRACER
8 - 1mm WHITE/BROWN TRACER
9 - 1mm BROWN/YELLOW TRACER
10 - 1mm BLACK
11 - 2.5mm RED
12 - 1mm GREEN/YELLOW TRACER
13 - 1mm BLUE/YELLOW TRACER
14 - 1mm YELLOW

1 METER - P/N 200-04588/01
2 METER - P/N 200-04588/02
3 METER - P/N 200-04588/03
4 METER - P/N 200-04588/04
5 METER - P/N 200-04588/05

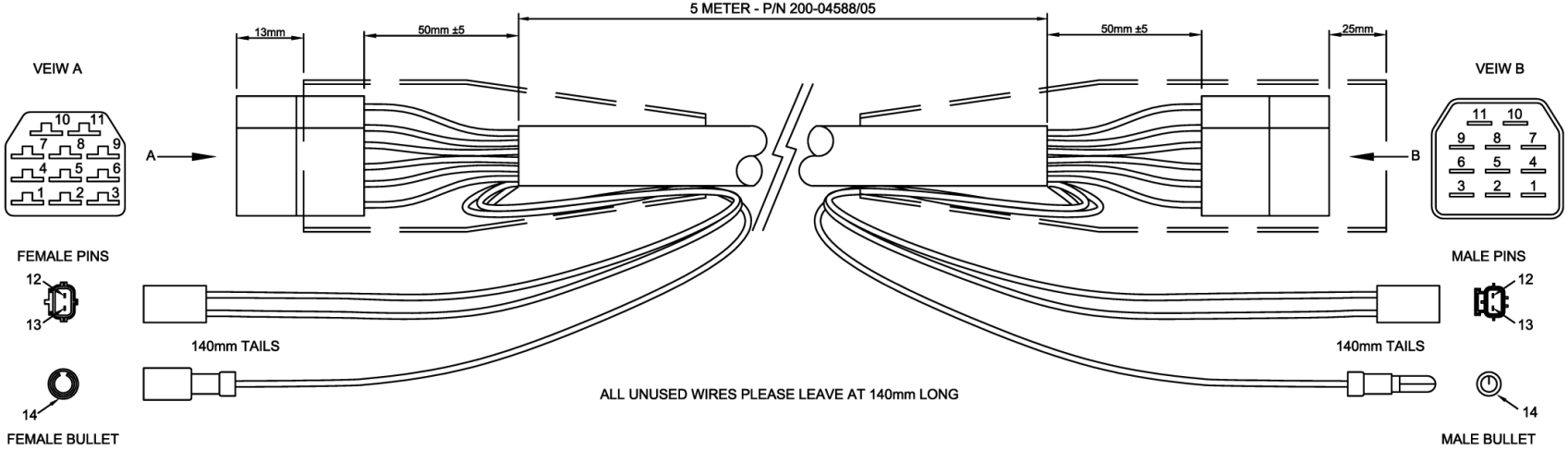

REV	DESCRIPTION	DATE	APP'D	DRAWN
01				

NOTES

DIMENSIONS IN MM (INCH)
DO NOT SCALE

TITLE: EXTENSION HARNESS

BETA MARINE
TEL +44 (0)1452 723492 FAX +44 (0)1452 883742

BETA MARINE LTD.
DAVY WAY, WATERWELLS,
QUEDGELEY, GLOUCESTER
GL2 2AD UK

DRAWN BY:–	SIZE	DWG NO.	REV
TW	A4	200-04588	00
CHECKED BY:– LT	SCALE NTS	PAGE 1 of 1	DATE 15/10/04

Declaration of Conformity for Recreational Craft Propulsion Engine with the Exhaust emission requirements of Directive 94/25/EC as amended by 2003/44/EC

(Completed by manufacturer of inboard engines without integral exhaust)

Name of engine manufacturer: Beta Marine Limited

Street: Davy Way, Waterwells **Town:** Quedgeley, Gloucestershire

Post Code: GL2 2AD **Country:** U.K.

Engine type-approved according to: Stage II of Directive 97/68/EC

(Name of Notified Body for exhaust emission assessment: TUV Kraftfahrt GmbH, Flensburg, Germany accredition number DAR KBA-P 00010-96)

DESCRIPTION OF ENGINES AND ESSENTIAL REQUIREMENTS

Engine type: Inboard engine.

Fuel type: Diesel gas oil JIS K2204:1997 or equal.

Combustion cycle: 4-stroke.

ENGINE(S) COVERED BY THIS DECLARATION	
Engine models and engine family names:	**EC Type certificate number (exhaust)**
BZ602 Beta 16 BD902 Beta 25 3KBXL898KCD	el*97/68DA*2002/88*0266*00
BD1105 Beta 30 BV1505 Beta 35 BV1505 Beta 38 3KBXL01.5BCD	el*97/68DA*2004/26KA*0164*03 el*97/68DA*2006/105KA*0164*04
BV1505T Beta 45 3KBXL01.5BAD	e1*97/68DA*2006/105KA*0160*02

ENGINE(S) COVERED BY THIS DECLARATION	
Engine models and engine family names:	**EC Type certificate number (exhaust)**
BV2003 Beta 43 BV2203 Beta 50 YKBXL02.2FCD	e1*97/68DA*2004/26KA*0072*09 e1*97/68DA*2004/105KA*0072*13
BV2403 Beta 60 YKBXL02.4FCD	el*97/68DA*2004/26KA*0073*05 el*97/68DA*2006/105KA*0073*09
BV2607 Beta 70 8KBXL02.6EAD	e1*97/68JA*2004/26*0494*00
BV3600 Beta 75 7KBXL03.6BCD	e1*97/68JA*2004/26*0430*00
BV3600T 3KBXL03.3BAD	el*97/68GA*2001/63*0144*00
BV3307 Beta 85 8KBXL03.3CAD	e1*97/68JA*2004/26*0460*00
BV3800 Beta 90 3KBXL03.8ACD	el*97/68GA*2001/63*0155*00
BV3800T Beta 105 3KBXL03.8ACD	e1*97/68JA*2004/26*0418*00

Essential requirements	Standards Used	Other normative document used	See technical file
Annex I.B – Exhaust Emissions			
engine identification	N/A	2033/44 annex 1B para 1.	QA025
exhaust emission requirements	N/A	2003/44 para 16, L214/19	EC type certificate has its own technical file.
durability	N/A	2033/44 annex 1B para 3.	QA033
owner's manual	BS EN ISO 10240	2033/44 annex 1B para 4.	N/A
Annex I.C – Noise Emissions	see craft manufacturer's Declaration of Conformity		

I declare on behalf of the engine manufacturer that the engine(s) will meet the exhaust emission requirements of Directive 94/25/EC as amended by Directive 2003/44/EC when installed in a recreational craft, in accordance with the engine manufacturer's supplied instructions and that this (these) engine(s) must not be put into service until the recreational craft into which it is (they are) to be installed has been declared in conformity with the relevant provisions of the above mentioned Directive

Name J. A. Growcoot

Signature and title: JAGrowcoot C.E.O.

(identification of the person empowered to sign on behalf of the engine manufacturer)

Date: (yr/month/day) 2008 / 10 / 22 Quedgeley, Gloucestershire

Certificate 2.06 Revision 09, 2015/06/08, latest models/approvals listed.

Emission Durability

IN RESPECT TO THE RECREATIONAL CRAFT DIRECTIVE 94/25/EC AND AMENDMENT 2003/44/EC ANNEX 1, B3.

The engine must be installed, maintained and operated within the parameters detailed in the Operator's Maintenance Manual. Maintenance must use approved materials, parts and consumables. Should the engine lie unused for a period in excess of 6 months it must be inhibited otherwise it will deteriorate with resulting decrease in performance. See also the Winterising and Laying Up procedures in the Operator's Maintenance Manual.

The fuel settings of the diesel injection system must not be tampered with otherwise the guarantee will be invalid and the performance may fall outside prescribed limit. Such adjustment cannot be allowed under the terms of the emission certification.

Performance of the engine depends upon the use of correct fuels, lubricants and inhibitors. These are fully detailed in the Operator's Maintenance Manual.

Particular attention must be paid to the installation with respect to the exhaust system. The system must be designed so that water cannot back feed into the engine. The run must be such that the back pressure at the engine manifold does not exceed the level detailed in the Operator's Maintenance Manual. Wet, water injected, exhaust systems must be at least the bore mentioned in the Operator's Maintenance Manual and should the run be excessive this bore must be increased accordingly. Back pressure is measured at the outlet of the engine manifold before the water injection bend or dry bellows.

Our experience since 1987 has shown that properly installed and maintained engines hold their performance without major mishap even when running hours exceed those mentioned in the Recreational Craft Directive. It is the owners / users responsibility to ensure that the engine continues to function properly and any malfunction must be immediately investigated. The Trouble Shooting section as detailed in the Operator's Maintenance Manual is particularly helpful in this respect. Engine performance, especially with respect to erratic running, exhaust condition, low power output and high oil consumption are indications of engine conditions that may result in emissions outside the prescribed limits and must therefore be investigated and rectified immediately.

Notes...

Notes...

Notes...

Service Record

	Service	Date	Responsible	
1	Commissioned			
2	First 25 hours			
3	First 50 hours			
4	Every 150 hours with shallow sump			
5	Every Year / Every 250 hours if sooner			
6				
7				
8				
9	Every 750 hours			
10				
11				
12				
13				
14				
15				
16				

	Service	Date	Responsible	
17				
18				
19				
20				
21				
22				
23				
24				
25				
26				
27				
28				
29				
30				
31				
32				

BETA MARINE

Beta Marine Limited, Davy Way, Waterwells, Quedgeley, Gloucester, GL2 2AD. UK.
Tel: +44 (0)1452 723492 Fax: +44 (0)1452 883742 Email: sales@betamarine.co.uk Website: www.betamarine.co.uk

Ref: OM 221-02889 REV 00