STEYRMOTORS
INNOVATION WITH LIGHTNESS

STEYR MARINE ENGINES

84 MARINE
TURBO DIESEL
+SOLAS

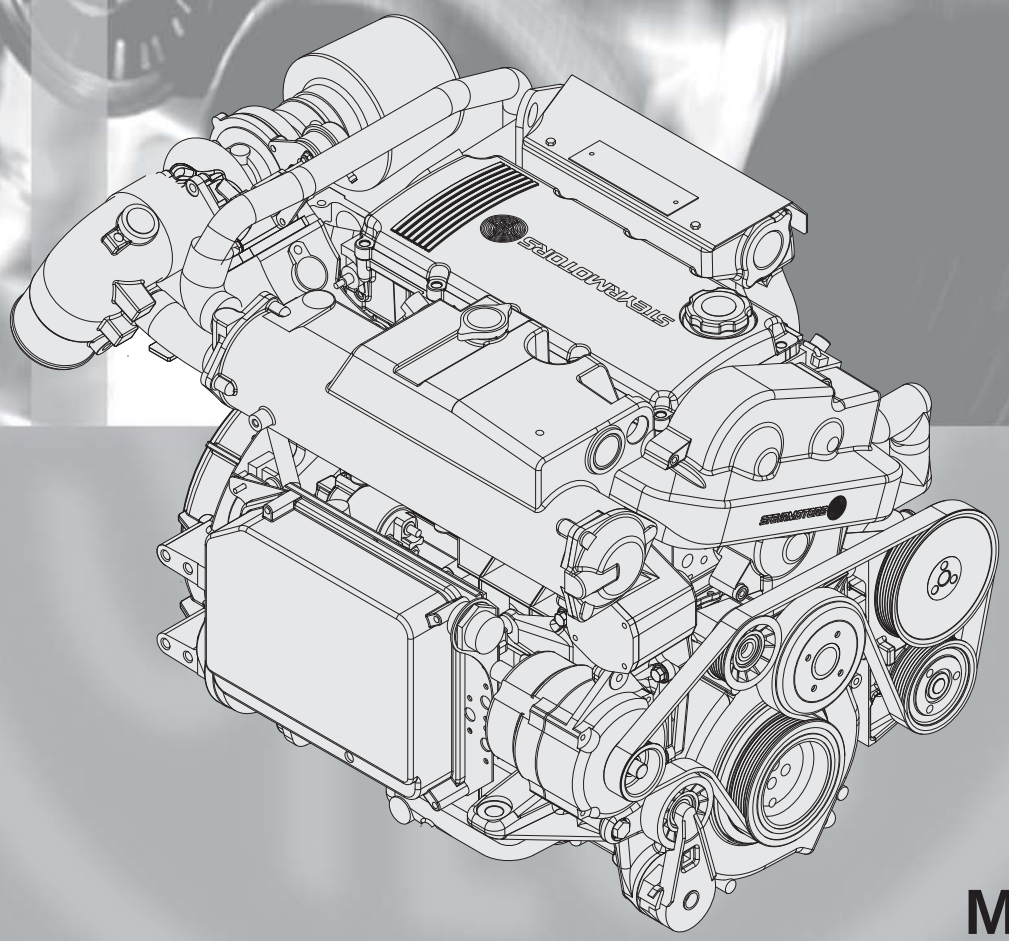

MO84K32

Serial no.: 48227 001 -->

SPARE PARTS CATALOGUE

P/N Z001025-0 3rd Edition, May 2014

TEL ++43 / 7252 / 222 / 20 **FAX** ++43 / 7252 / 222 / 29 **@** e.sales@steyr-motors.com

www.steyr-motors.com

STEYR MOTORS GmbH
Im Stadtgut B1, A-4407 Steyr-Gleink, AUSTRIA

When ordering spare parts are always indicate serial engine number.
This will speed up delivery and help to avoid mistakes.

The primary model and serial number is located on the engine as illustrated. These numbers are required when requesting warranty and ordering parts.

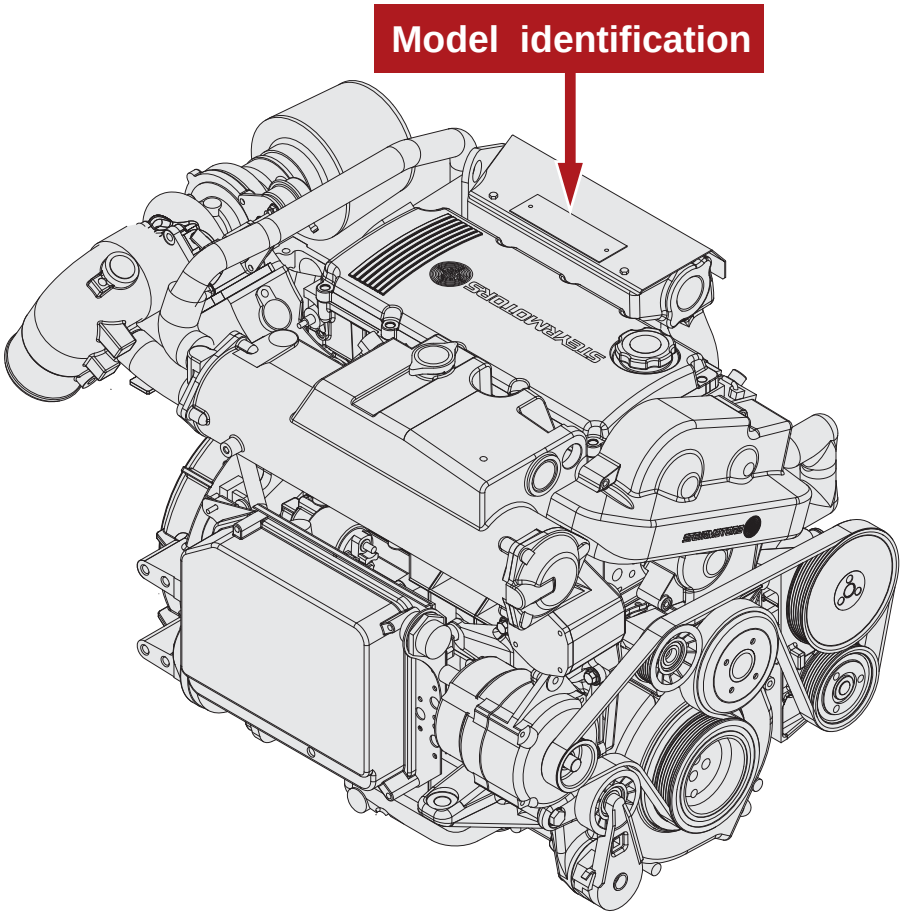

Substituting automotive or generally supplied parts and hardware will often result in less than desired performance. For this reason, you should insist on the known quality of genuine STEYR Marine matched replacement parts, and should never use parts of unknown quality.

We reverse the right to make changes in design and execution which incorporate advances in technology!

SIGNS AND SYMBOLS

1

STEYRMOTORS
INNOVATION WITH LIGHTNESS

TA 0101

CYLINDERBLOCK

84 MARINE TURBO DIESEL +SOLAS

2 01014084-0

3 4 5 6 8 9 7

Pos.	Part.-No.	Qty	Designation	Step
24	Z002676-0	1	SPARE PART COVER T-BELT —>48226146	.2
26	2203711-1	1	COVER T-BELT, UPPER PART 48226147—>	.2
28	9000538-0	3	HEX.FLANGE BOLT EN 1665-M6x50 A2-70	.2

1 Table number

2 Partlist number for whole table/ functional groups

3 Positions number

4 Spare part number

5 Quantity for one engine respectively assembly group

6 Designation and description of spare part

7 Groupparts are marked with a circle around the position number. Parts in the list below these, which had an increased step number by one, will be included at delivery.

8 **—> 4.....** Arrow before engine number: Spare part UNTIL and LOWER

9 **4..... —>** Arrow past engine number: Spare part FROM and HIGHER

ACROBAT

... back to "starting point"

... one page back

... one page vorward

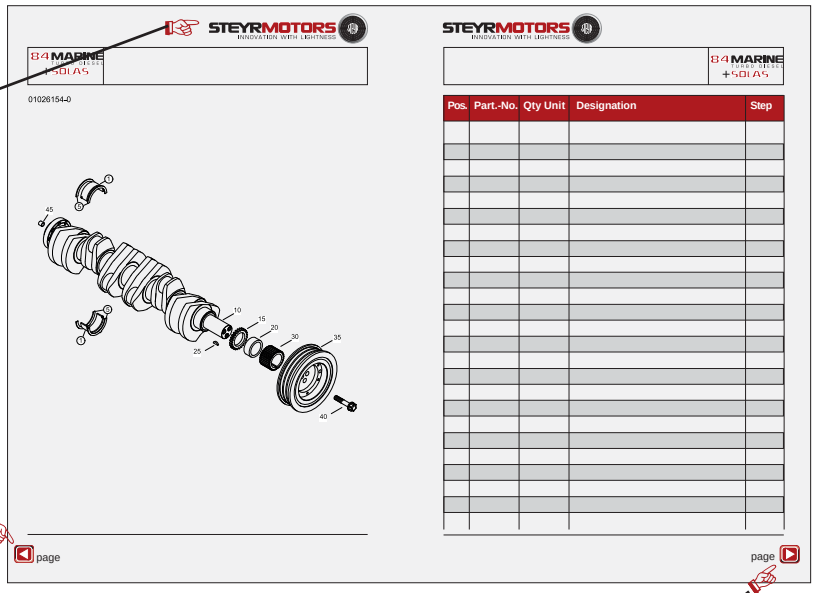

84 MARINE TURBO DIESEL +SOLAS

TABLE OF CONTENTS - SPARE PARTS CATALOGUE

TA 0100 Page 10
MOUNT BRACKET, LIFTING EYE, GASKET SET

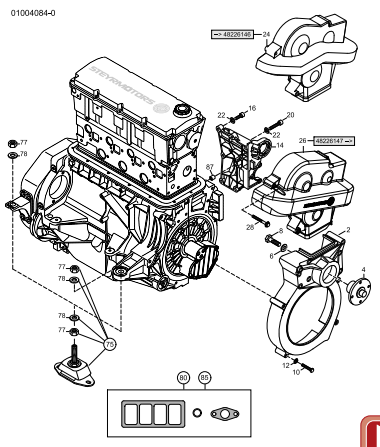

TA 0101 Page 12
CRANKCASE

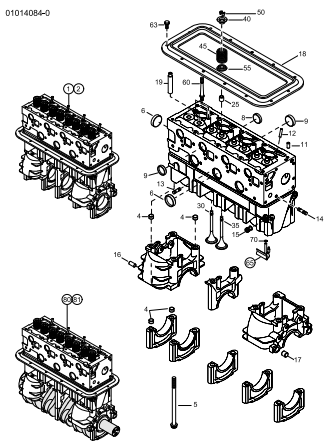

TA 0102 Page 14
CRANKSHAFT, BEARING, DAMPER

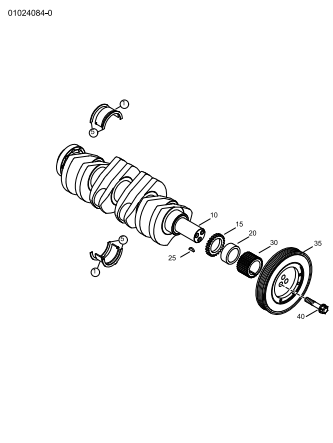

TA 0103 Page 16
FLYWHEEL, FLYWHEELHOUSING

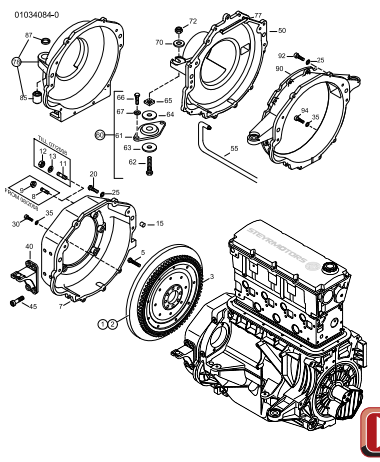

TA 0104 Page 20
PISTON, RINGS AND PIN, CONNECTION ROD

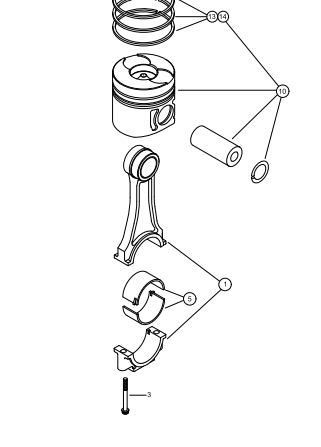

TA 0105 Page 22
CAMSHAFT, HOUSING

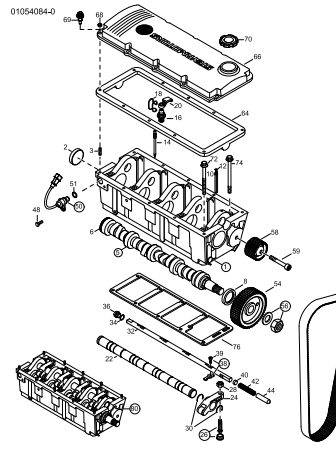

TA 0106 Page 26
OILPUMP, OILPIPE, OILPAN

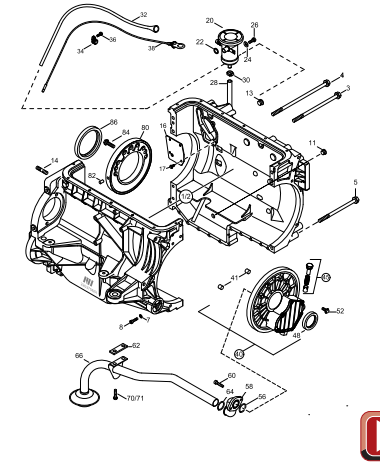

TA 0108 Page 30
INTAKE MANIFOLD

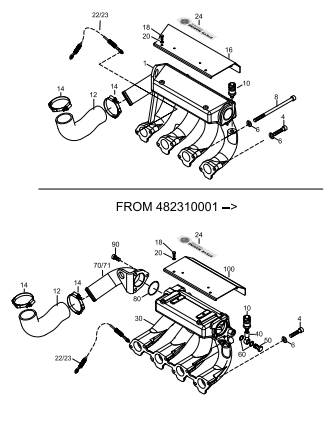

TA 0109 Page 32
POWER TAKE OFF FRONT

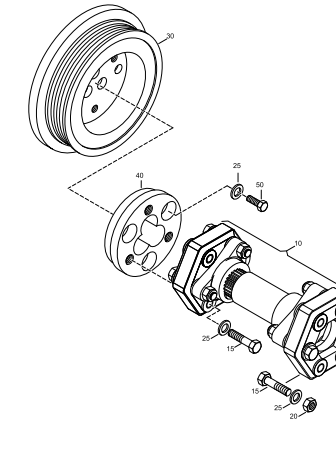

TABLE OF CONTENTS - SPARE PARTS CATALOGUE

84 MARINE TURBO DIESEL +SOLAS

TA 0113 Page 34
OILCOOLER

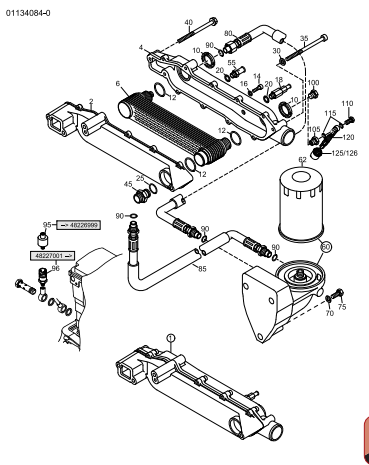

TA 0114 Page 38
EXHAUST, HEAT EXCHANGER, GASKET

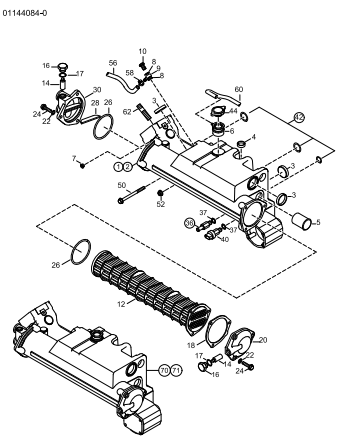

TA 0201 Page 42
COUPLER

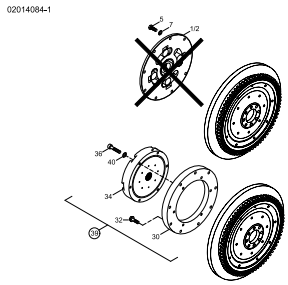

TA 0302 Page 44
FUEL PUMP, UNIT INJECTOR, PIPE

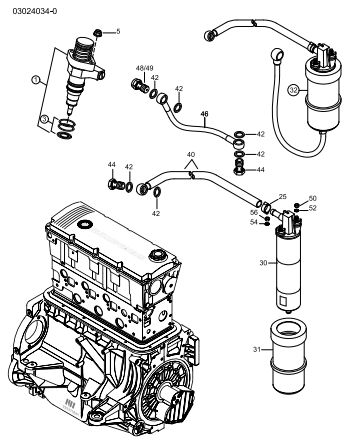

TA 0304 Page 46
AIRFILTER

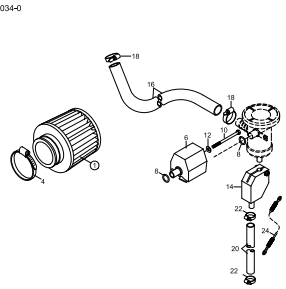

TA 0305 Page 48
TURBO

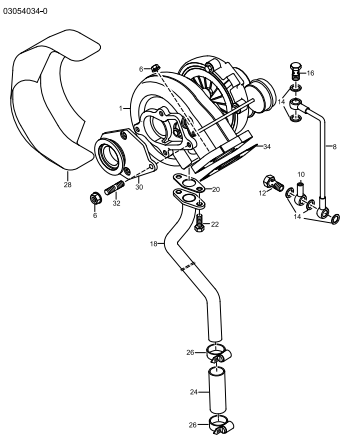

TA 0308 Page 50
CONTR. SOLENOID, POTENTIOMETER

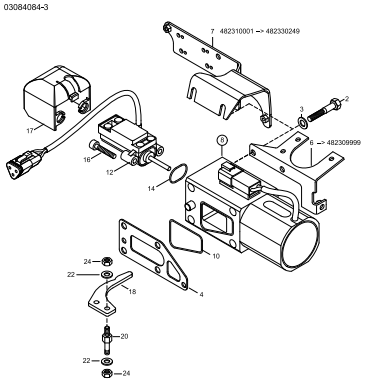

TA 0309 Page 52
FUEL FILTER

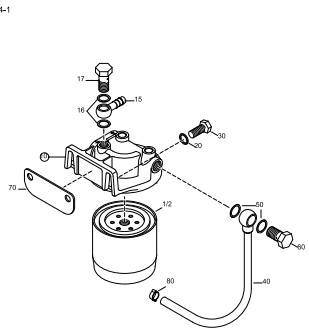

TA 0311 Page 54
GLOW PIN

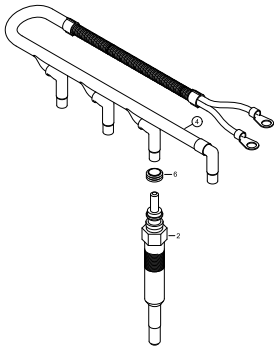

84 MARINE TURBO DIESEL +SOLAS

TABLE OF CONTENTS - SPARE PARTS CATALOGUE

TA 0312 Page 56
POT. ACCELE., BOOST PRESSURE SENSOR

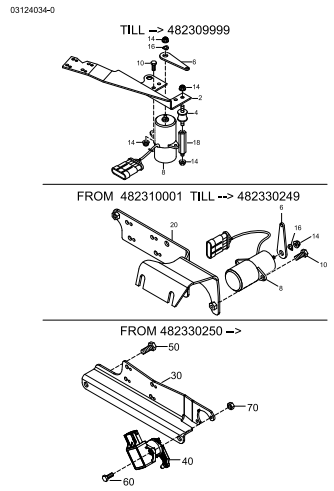

TA 0401 Page 58
HIGH RISER, EXHAUSTPIPE

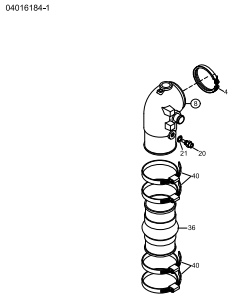

TA 0503 Page 60
WATERPIPE, THERMOSTAT

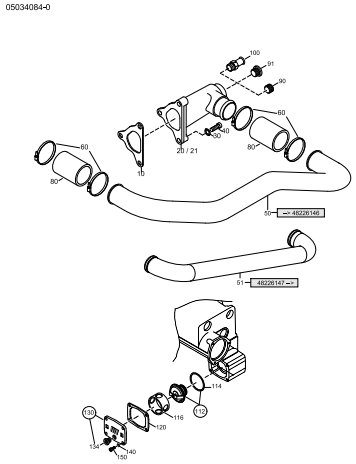

TA 0504 Page 62
WATERPUMP

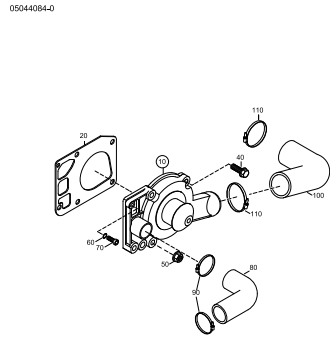

TA 0505 Page 64
DRIVE BELTS, PULLEYS, TENSIONER

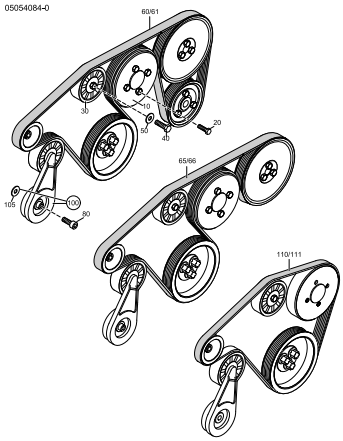

TA 0510 Page 66
RAW WATER PUMP

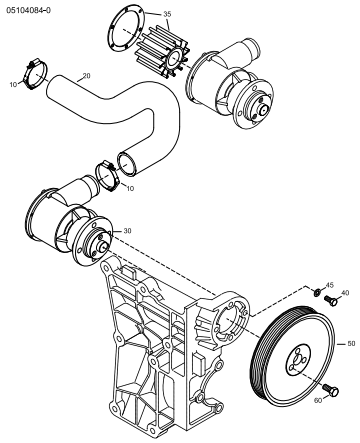

TA 0512 Page 68
RAW WATER PIPES, FUEL-OIL COOLER

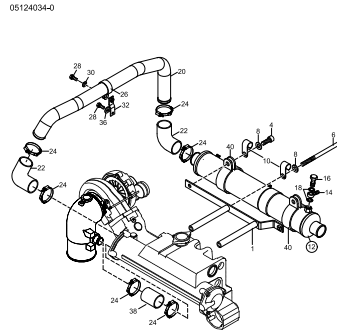

TA 0601 Page 70
ALTERNATOR

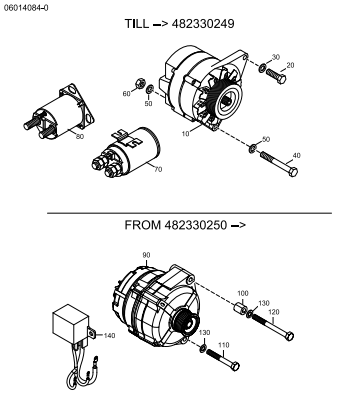

TA 0603 Page 72
STARTING

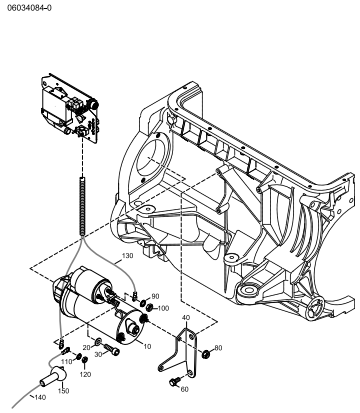

STEYRMOTORS
INNOVATION WITH LIGHTNESS

TABLE OF CONTENTS - SPARE PARTS CATALOGUE

84 MARINE TURBO DIESEL +SOLAS

TA 0605 Page 74
ENGINE HARNESS

48221067 --> 48226999

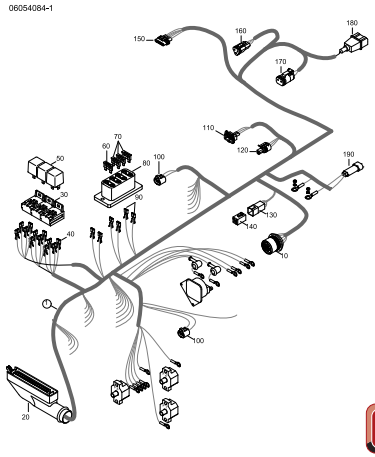

TA 0605 Page 76
ENGINE HARNESS

48227001 -->

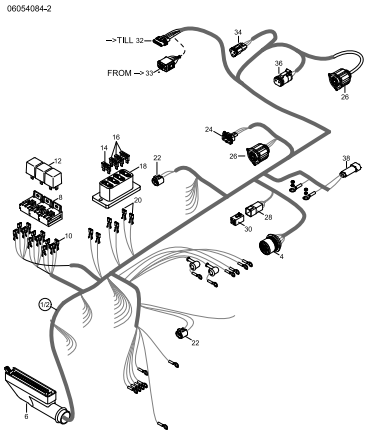

TA 0606 Page 78
SECURETYSYSTEM, FUSES, ECU, E-BOX

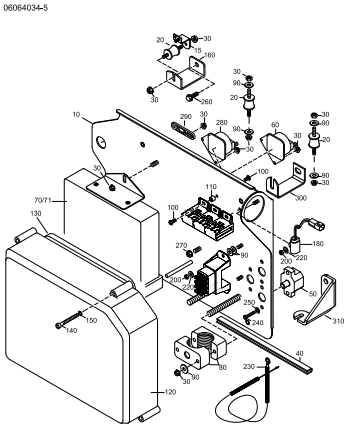

TA 0608 Page 80
INSTRUMENT PANEL (STANDARD)

TILL -->2010

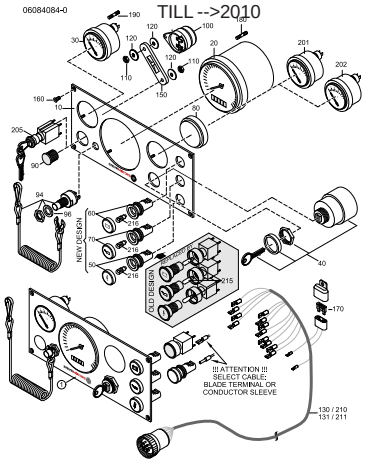

TA 0607 Page 82
INSTRUMENT PANEL (STANDARD)

FROM 2010-->

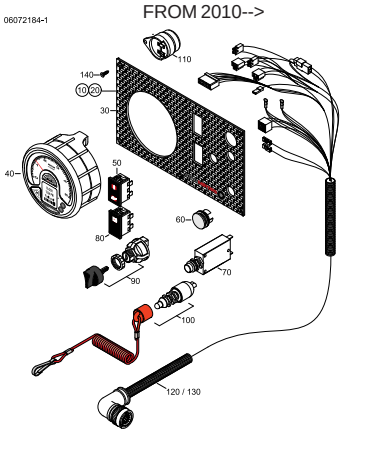

TA 0609 Page 84
INSTRUMENT PANEL SOLAS (STANDARD)

TILL -->2010

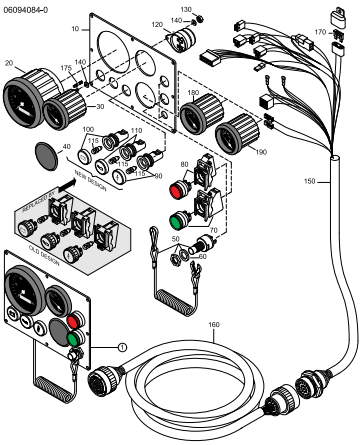

TA 0609 Page 86
INSTRUMENT PANEL SOLAS (STANDARD)

FROM 2010-->

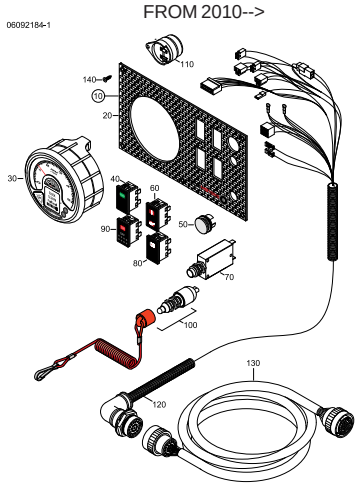

TA 0610 Page 88
DISPLAY

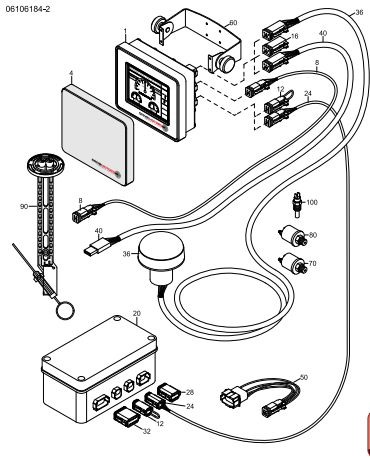

TA 0611 Page 90
SWITCH PANEL FOR DISPLAY

TILL -->2010

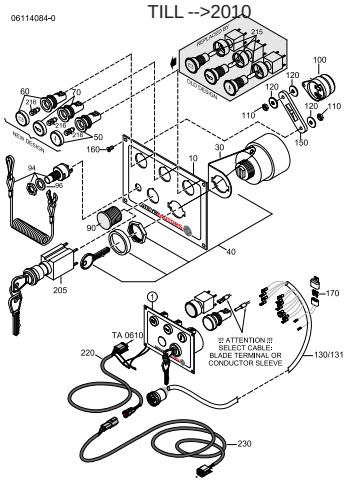

84 MARINE TURBO DIESEL + SOLAS

TABLE OF CONTENTS - SPARE PARTS CATALOGUE

TA 0611 Page 92
SWITCH PANEL FOR DISPLAY

FROM 2010-->

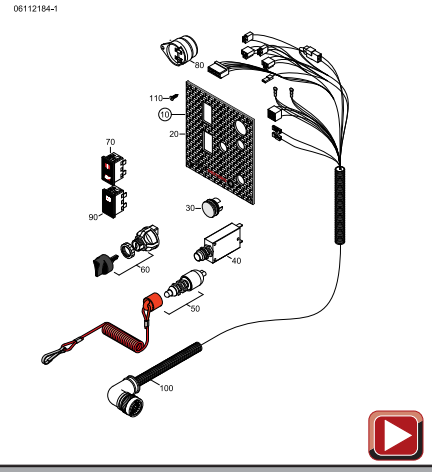

TA 0612 Page 94
PUSH BUTTON PANEL SOLAS FOR DISPLAY

TILL -->2010

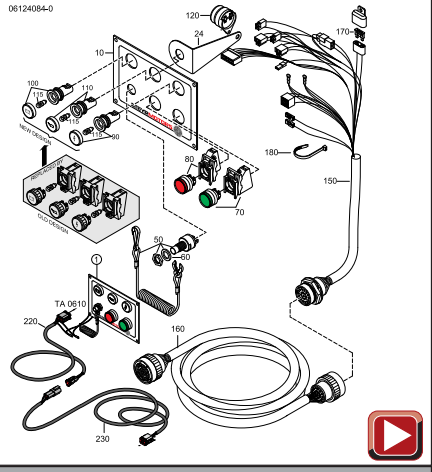

TA 0612 Page 96
PUSH BUTTON PANEL SOLAS FOR DISPLAY

FROM 2010-->

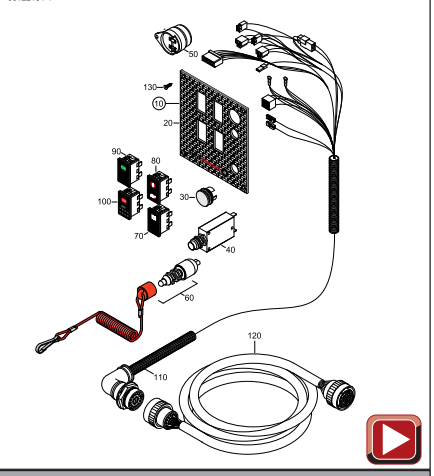

TA 0613 Page 98
EXTENSION CABLE INSTRUMENTS

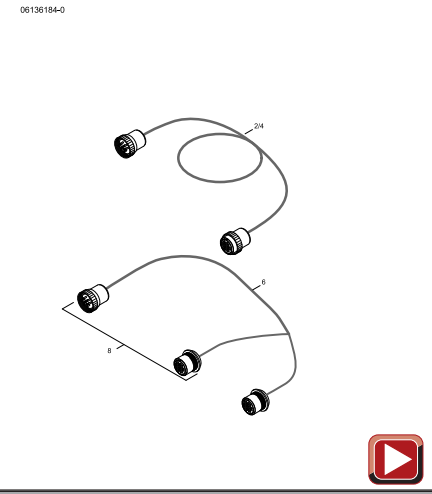

TA 0700 Page 100
TRANSMISS., MOUNTING BRACKETS, PIPES

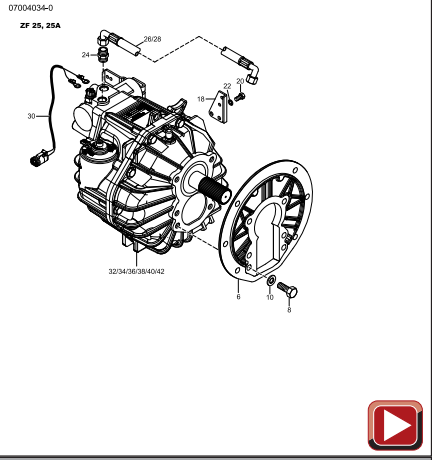

TA 0701 Page 102
TRANSMISSION-SHAFT, PTO-SHAFT (ALU)

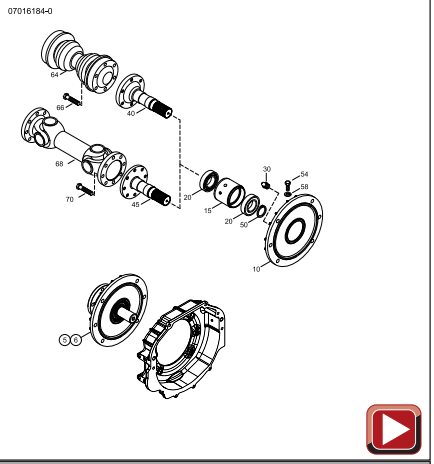

TA 1408 Page 104
HYDRAULIC PUMP

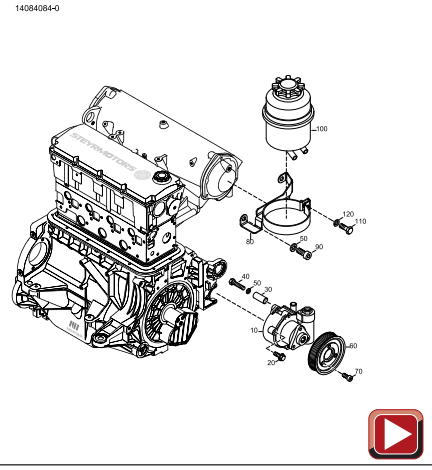

TA 1409 Page 106
HYDRAULIC PIPES

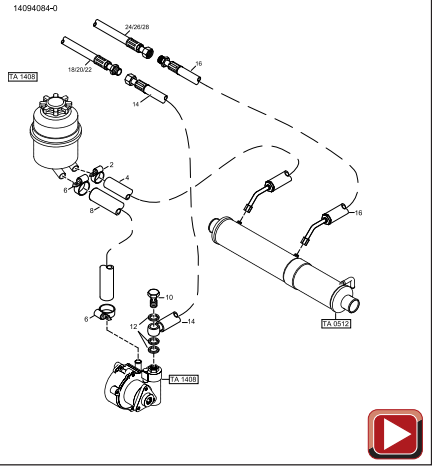

TA 2207 Page 108
ENGINE PREHEATING

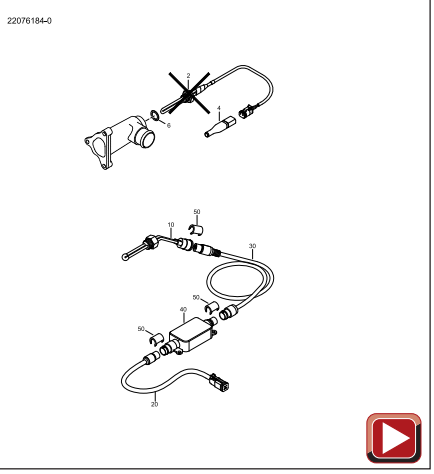

TABLE OF CONTENTS - SPARE PARTS CATALOGUE

84 MARINE TURBO DIESEL +SOLAS

TA 4000 Page 110
INTEGR. FLYWHEELGENERATOR (IFG)

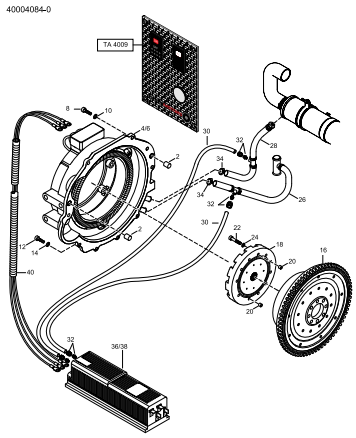

TA 4009 Page 112
PUSH BUTTON PANEL „IFG“

TILL -->2010

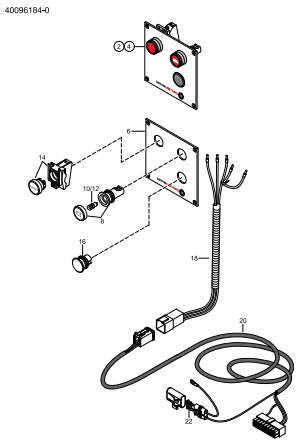

TA 4009 Page 114
PUSH BUTTON PANEL „IFG“

FROM 2010-->

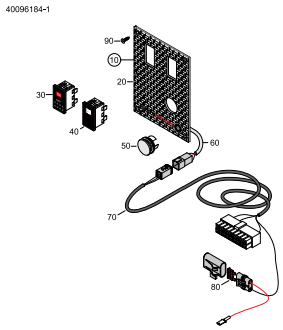

TA 4100 Page 116
HYBRID

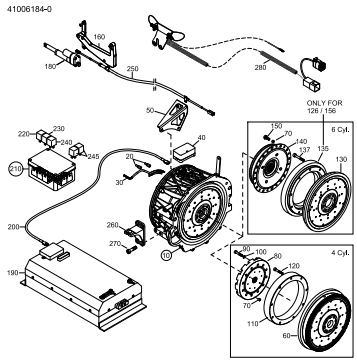

TA 6012 Page 118
HEATING UNIT, CIRCULATION PUMP

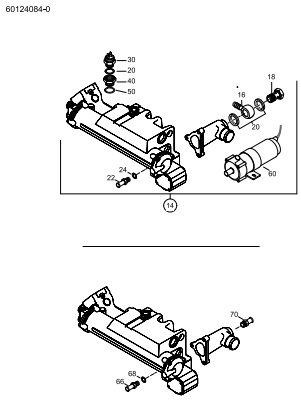

STEYRMOTORS
INNOVATION WITH LIGHTNESS

84 MARINE TURBO DIESEL +SOLAS

MOUNT BRACKET, LIFTING EYE, GASKET SET

01004084-0

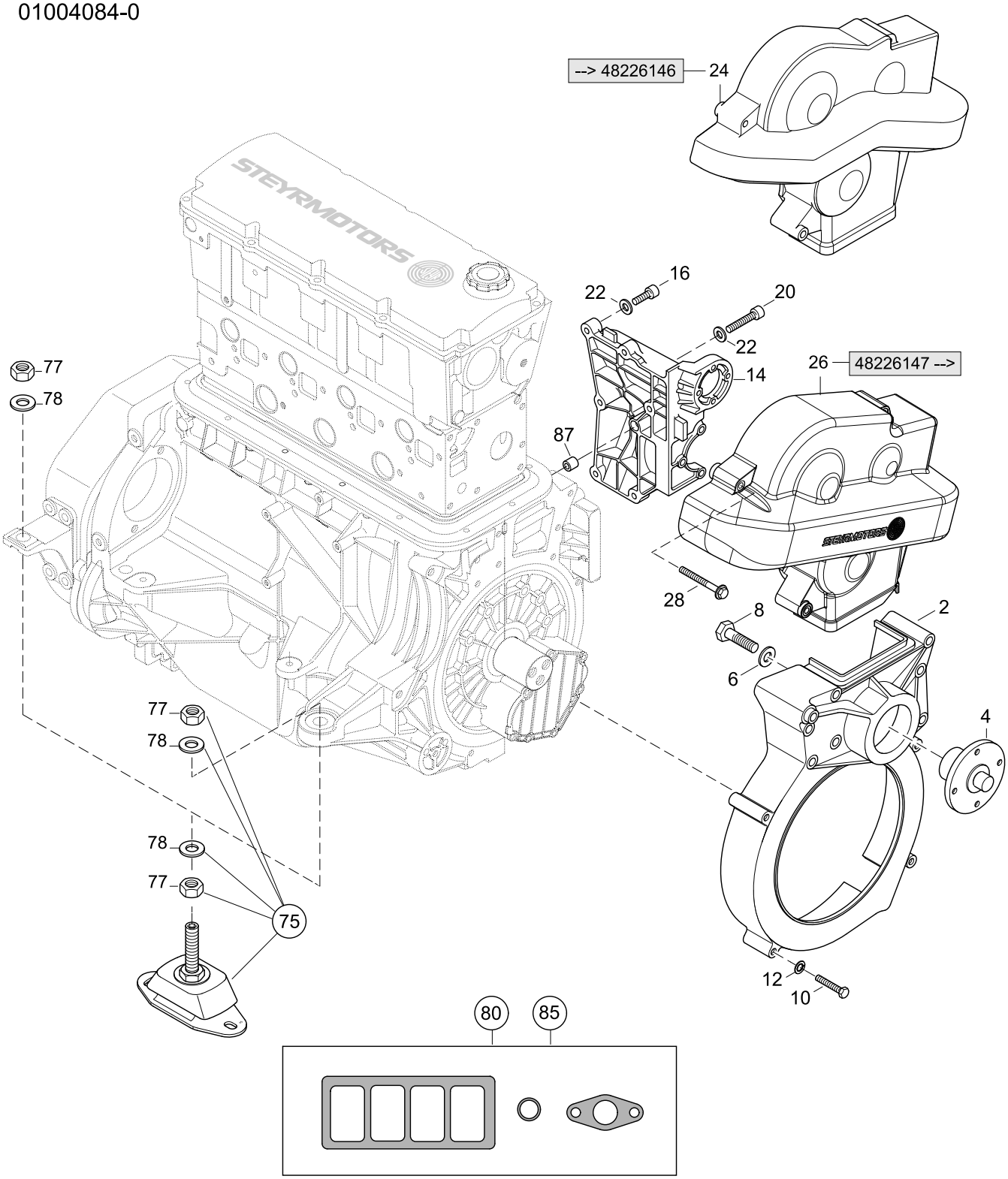

MOUNT BRACKET, LIFTING EYE, GASKET SET

84 MARINE TURBO DIESEL +SOLAS

01004084-0

Pos.	Part.-No.	Qty	Designation	Step
2	Z002406-0	1	COVER T-BELT ASSY, LOWER WITH BEARING (PAINTED)	.2
4	2203516-2	1	BEARING SHAFT	.2
6	2203563-0	1	SUPPORT WASHER, BEARING SHAFT	.2
8	3802515-0	1	HEX.HD.SCR. ISO 4017-M10x20-8.8-A3C	.2
10	9000289-0	11	HEX.HD.BOLT ISO 4014-M6x65-8.8-A2C	.2
12	3930070-0	11	WASHER DIN 125-6-140HV-A2	.2
14	Z002428-0	1	BRACKET, ENGINE MOUNT (PAINTED (PAINTED)	.2
16	9000045-0	4	HEX.SOCK. HD.CAP SCR. DIN 912-M8x40-8.8-DAC A500	.2
20	3862466-0	3	HEX.SOCK. HD.CAP SCR. DIN 912-M8x65-8.8-A2C	.2
22	3930103-0	7	WASHER DIN 125-8.4-140HV-A2	.2
24	Z002676-0	1	SPARE PART COVER T-BELT	.2
26	2203711-1	1	COVER T-BELT, UPPER PART	.2
28	9000538-0	3	HEX.FLANGE BOLT EN 1665-M6x50 A2-70	.2
75	2203804-5	4	ENGINE MOUNT ASSY 55SH	.2
77	9000442-0	2	HEX.NUT ISO 8673-M18x1,5-8-A-DAC	..3
78	9000441-0	2	LOCKWASHER 19,5x34,5	..3
80	Z002409-0	1	SEAL KIT_4 CYL. MARINE ENGINE	.2
85	Z002409-6	1	SEAL KIT 4 CYL. MARINE ENGINE WO. FRAME SEAL	.2
87	2203543-0	2	FITTING SLEEVE	.2

STEYRMOTORS
INNOVATION WITH LIGHTNESS

84 MARINE TURBO DIESEL +SOLAS

CRANKCASE

01014084-0

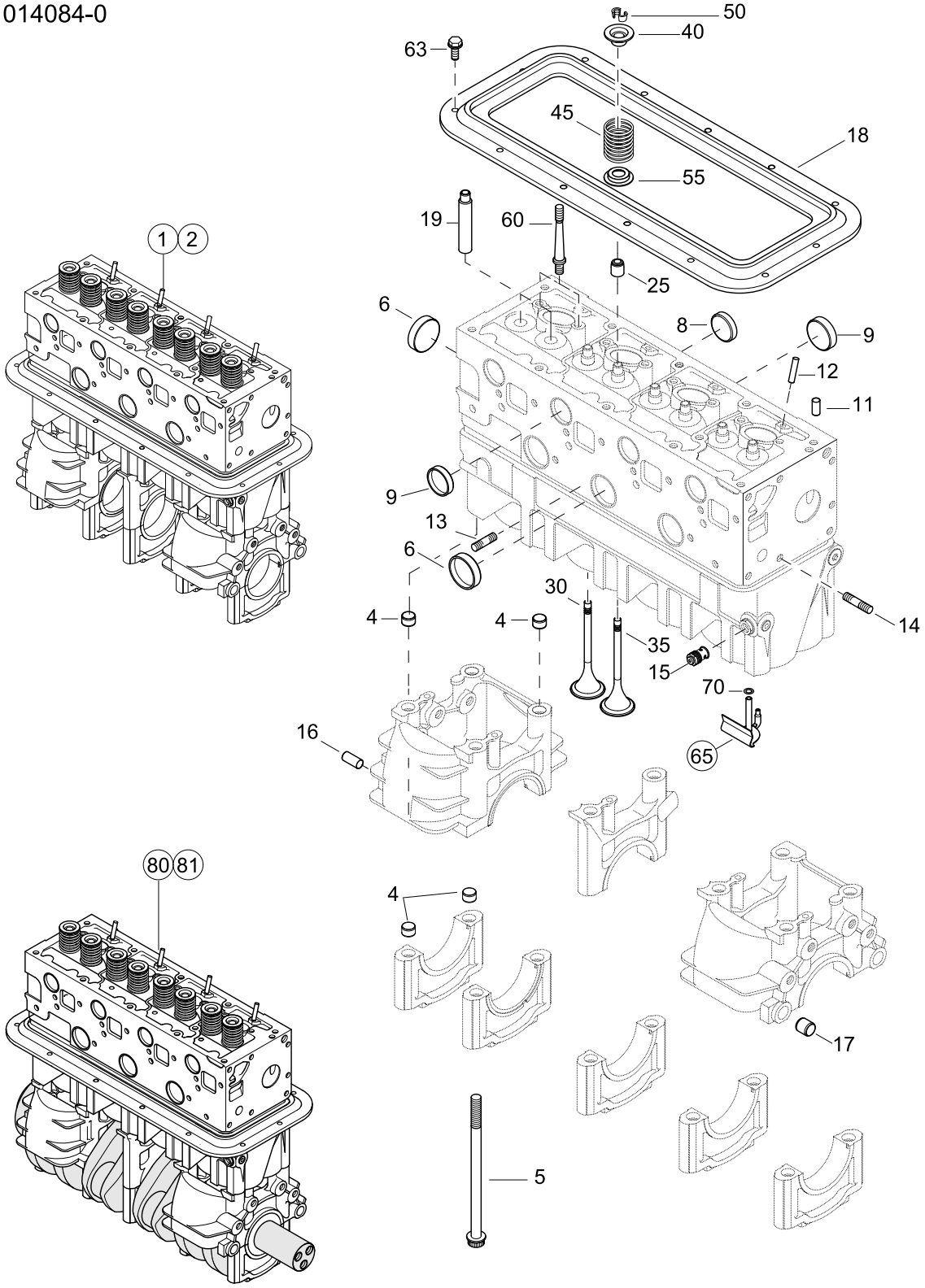

CRANKCASE

84 MARINE TURBO DIESEL +SOLAS

01014084-0

Pos.	Part.-No.	Qty	Designation	Step
1	MZ40084-0	1	CYLINDER BLOCK ASSY. MARINE (INCL. VALVES) —>48227163	.2
2	MZ40084-1	1	CYLINDER BLOCK ASSY. MARINE (INCL. VALVES) 48227164—>	.2
4	2172799-0	16	FITTING SLEEVE DM14.5 (TO M12)	..3
5	2174329-0	10	BOLT, MAIN BEARING	..3
6	2170309-0	4	CORE HOLE PLUG 40/8	..3
8	2172676-0	2	CORE HOLE PLUG 35/8	..3
9	2172170-0	3	CORE HOLE PLUG 28/7	..3
11	3901416-0	2	PARALLEL PIN ISO 2338-8m6x16-ST	..3
12	3901328-0	4	PARALLEL PIN ISO 2338-6m6x30-ST	..3
13	9000327-0	2	STUD DIN 939-M6x20-8.8-A2C	..3
14	3812435-0	1	STUD DIN 938-M8x35-8.8-A3C	..3
15	2178525-1	1	COOLING OIL VALVE ASSY.	..3
16	3901509-0	2	PARALLEL PIN ISO 2338-10m6x20-ST	..3
17	2170298-0	2	FITTING SLEEVE DM12.5 (TO M10)	..3
18	2040217-0	1	FRAME SEAL	..3
19	2172133-N	8	VALVE GUIDE	..3
25	2172096-1	8	VALVE STEM SEAL	..3
30	2177577-1	4	EXHAUST VALVE	..3
35	2177576-6	4	INTAKE VALVE	..3
40	2177349-0	8	VALVE-SPRING RETAINER	..3
45	2172362-0	8	VALVE SPRING	..3
50	2170171-0	16	VALVE COLLET	..3
55	2177415-0	8	VALVE SPRING WASHER	..3
60	2174321-1	8	STUD UNIT INJECTOR	.2
63	9000287-0	13	HEX.FLANGE BOLT EN 1665-M6x12-8.8	.2
65	2178478-0	4	SPRAYING NOZZLE ASSY	.2
70	2173533-0	4	O-RING 5,23 x 2,62	..3
80	MT40084-0	1	PARTIAL ENGINE (BLOCK, PISTON, CR.S. & VALVES) —>48227163	.2
81	MT40084-1	1	PARTIAL ENGINE (BLOCK, PISTON, CR.S. & VALVES) 48227164—>	.2

STEYRMOTORS
INNOVATION WITH LIGHTNESS

84 MARINE TURBO DIESEL +SOLAS

CRANKSHAFT, BEARING, DAMPER

01024084-0

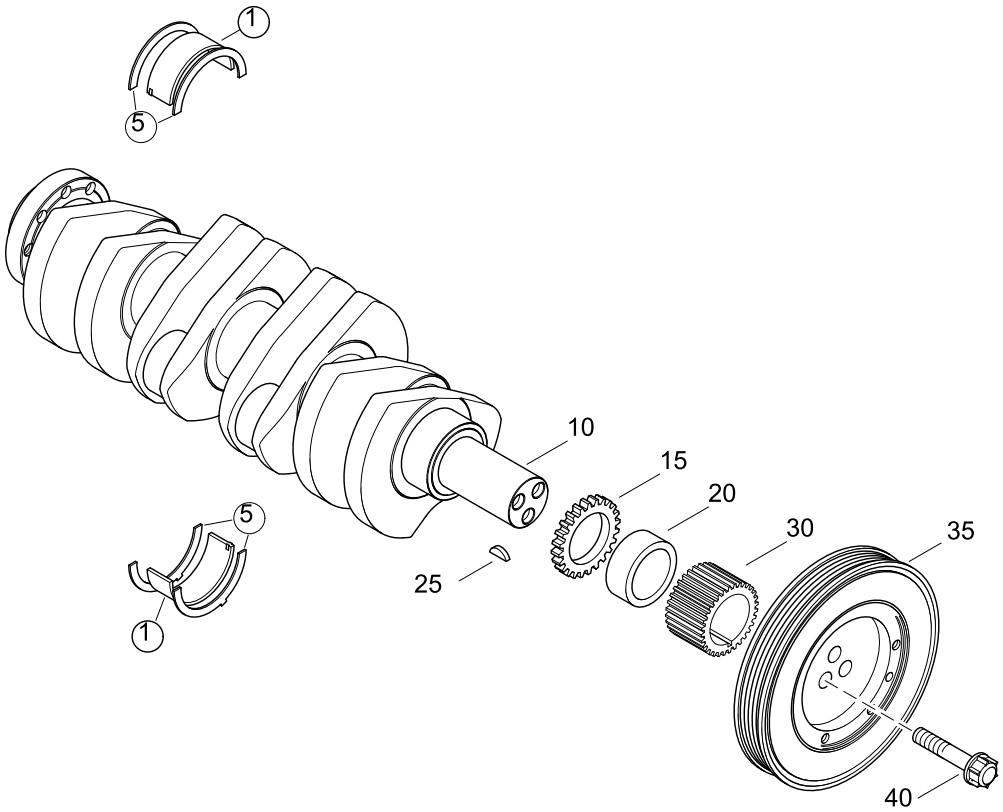

CRANKSHAFT, BEARING, DAMPER

84 MARINE TURBO DIESEL +SOLAS

01024084-0

Pos.	Part.-No.	Qty	Designation	Step
1	Z002003-0	5	MAIN BEARING ASSY. CRANKSHAFT	.2
5	Z002002-0	1	AXIAL BEARING ASSY. CRANKSHAFT	.2
10	Z002427-0	1	CRANKSHAFT 4 CYL. (SPARE PART)	.2
15	2172584-0	1	GEAR, OILPUMP DRIVE CRANKSHAFT	.2
20	2172316-0	1	BARREL RING	.2
25	3960012-0	1	WOODRUFFKEY DIN 6888-8x9	.2
30	2172770-0	1	SYNCHRONOUS BELT PULLEY CRANKSHAFT	.2
35	2203498-0	1	TORSIONAL VIBRATION DAMPER	.2
40	2205328-0	3	SCREW - VIBRATION DAMPER	.2

STEYRMOTORS
INNOVATION WITH LIGHTNESS

84 MARINE TURBO DIESEL +SOLAS

FLYWHEEL, FLYWHEELHOUSING

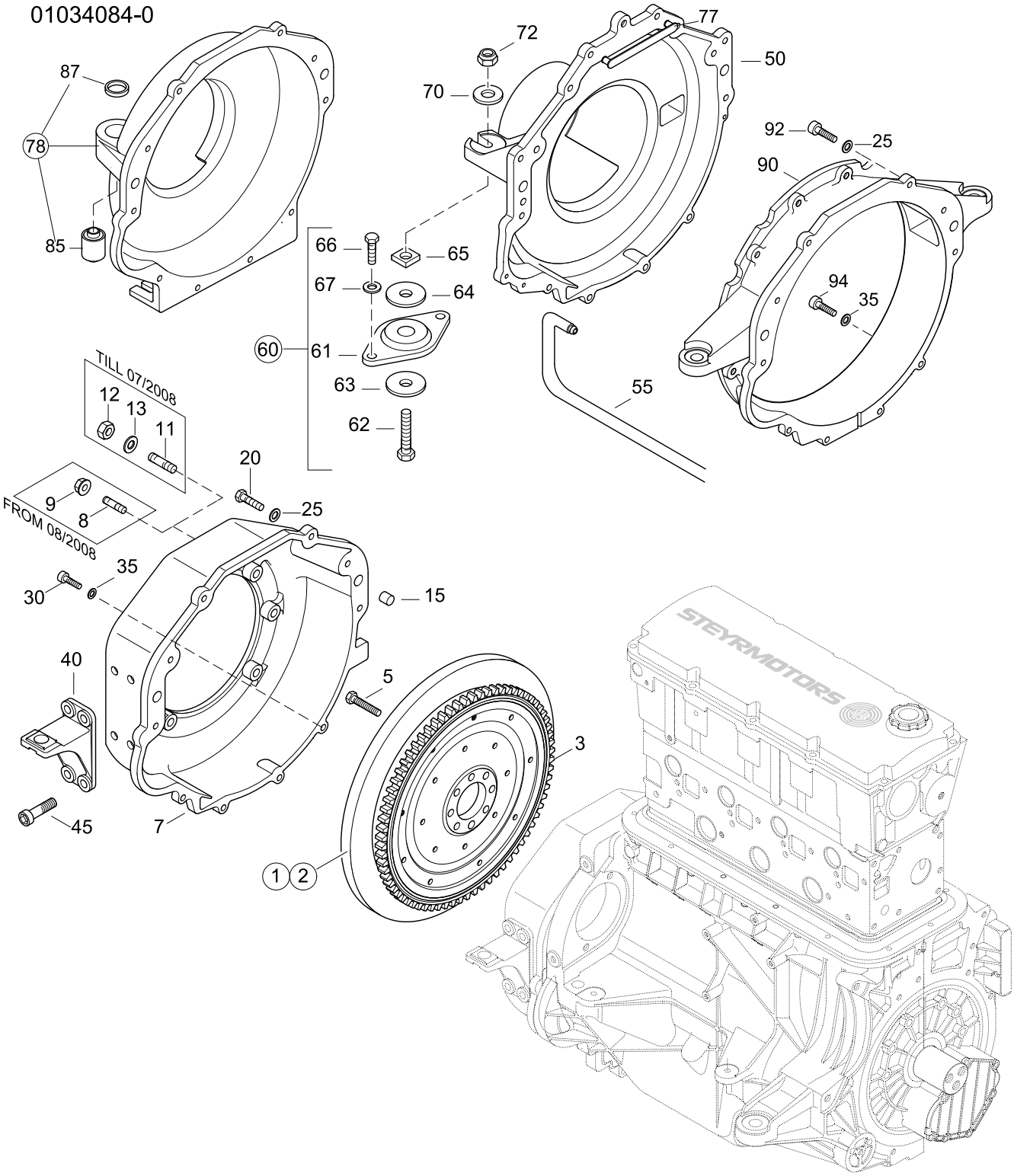

FLYWHEEL, FLYWHEELHOUSING

84 MARINE TURBO DIESEL +SOLAS

01034084-0

Pos.	Part.-No.	Qty	Designation	Step
1	2203739-1	1	FLYWHEEL ASSY. - DM56 —>48225999	.2
2	2203739-2	1	FLYWHEEL ASSY. - DM40 48226001—>	.2
3	2205031-0	1	STARTER RING GEAR, FLYWHEEL	..3
5	2174592-0	8	HEX. HEAD SCREW M10x30-12.9	.2
7	Z002165-0	1	SPARE FLYWHEEL HOUSING B/W FLANGE PAINTED	.2
8	9000371-0	6	STUD DIN 835-M10x25-8.8-A3C	.2
9	9000042-1	6	HEX.FLANGE NUT DIN 6923-M10-8-A3C	.2
11	9000082-0	6	STUD DIN 835-M12x25-8.8-A3C	.2
12	3871319-0	6	HEX.NUT ISO 4032-M12-8-A3C	.2
13	3930282-0	6	WASHER DIN 125-A13-140HV-A3C	.2
15	3900184-0	2	SPRING PIN, SLIGHT TYPE DIN 7346-16x22	.2
20	3862545-0	5	HEX.SOCK. HD.CAP SCR. DIN 912-M10x35-A2-70	.2
25	3930075-0	5	WASHER DIN 125 A10.5-140HV-A2	.2
30	3862433-0	4	HEX.SOCK. HD.CAP SCR. DIN 912-M8x30-A2-70	.2
35	3930103-0	4	WASHER DIN 125-8.4-140HV-A2	.2
40	2178722-1	2	BRACKET FLYWHEEL HOUSING	.2
45	9000081-0	8	HEX.SOCK.HD.CAP SCR. DIN 912-M12x35-8.8-A3C	.2
50	2203733-9	1	FLYWHEEL HOUSING OMC/VOLVO SX PAINTED	.2
55	O913787-0	1	HOSE-FLYWHEEL HOUSING	.2
60	O986712-0	1	SMALL PARTS REAR MOUNTS	.2
61	O983932-0	2	REAR MOUNT ASSY	..3
62	O318573-0	2	BOLT, REAR MOUNT	..3
63	O911780-0	2	WASHER-REAR MOUNT-LOWER	..3
64	O912889-0	2	WASHER REAR MOUNT	..3
65	O911776-0	2	SQUARE NUT-REAR MOUNT	..3
66	O309484-0	4	HEX. SCREW 3/8-16UNCx1-1/4"	..3
67	O319453-0	4	WASHER	..3
70	O911778-0	2	WASHER, REAR MOUNT	.2
72	O313623-0	2	LOCK NUT, REAR MOUNT	.2
77	2178504-0	2	COVER	.2

STEYRMOTORS
INNOVATION WITH LIGHTNESS

84 MARINE TURBO DIESEL +SOLAS

FLYWHEEL, FLYWHEELHOUSING

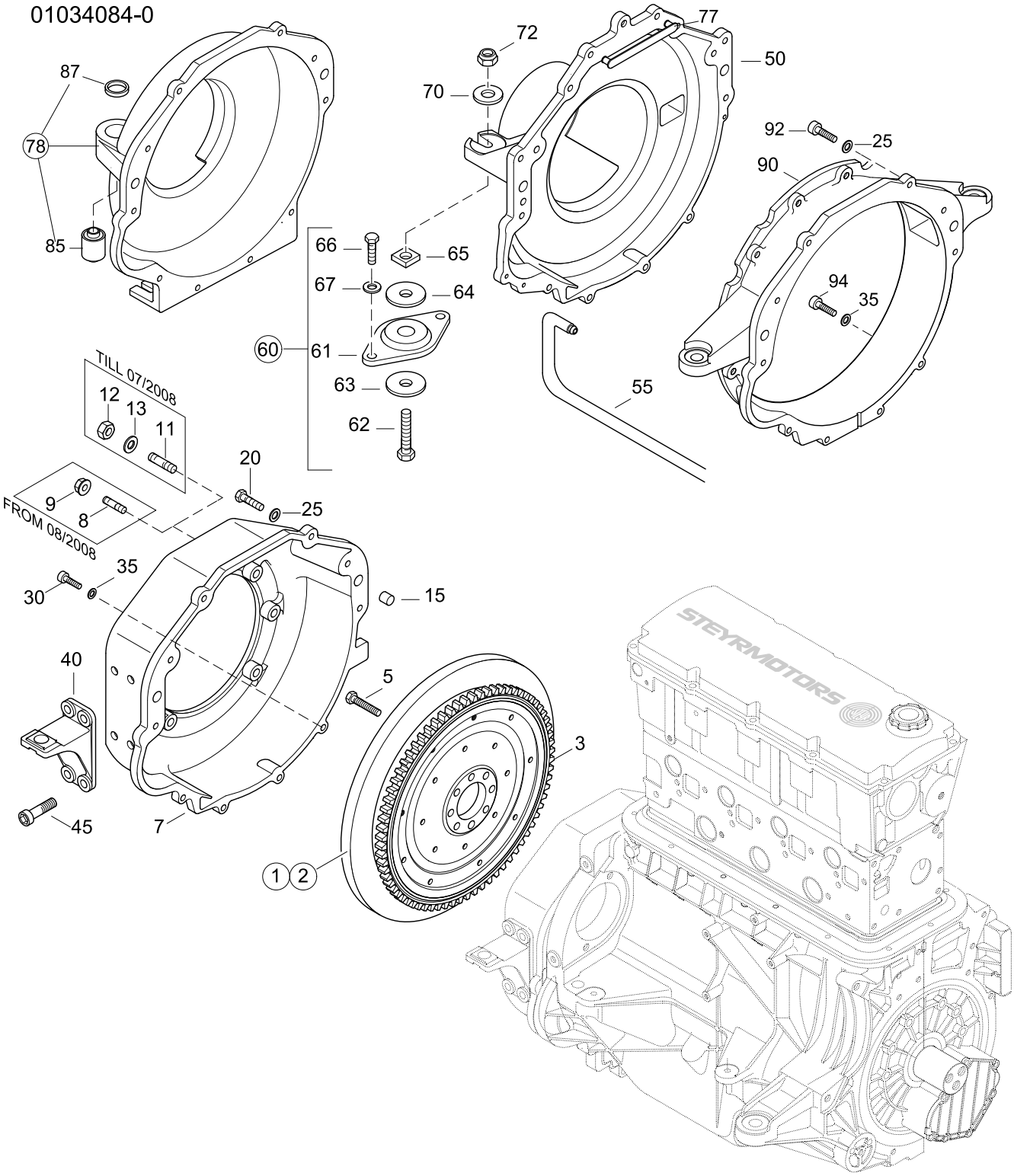

FLYWHEEL, FLYWHEELHOUSING

84 MARINE TURBO DIESEL +SOLAS

01034084-0

Pos.	Part.-No.	Qty	Designation	Step
78	2178833-M	1	HOUSING FLYWHEEL MERCURY ASSY PAINTED	.2
85	2178876-2	2	SINENT BLOCK F. FLY WHEEL HOUS ING ASYMMETRIC L=44,7	..3
87	2178877-0	2	WASHER-REAR MOUNT-LOWER	..3
90	2178052-9	1	HOUSING FLYWHEEL SAE 4 PAINTED	.2
92	3860149-0	5	HEX.SOCK. HD.CAP SCR. DIN 912-M10x40-8.8-A3C	.2
94	9000064-0	4	HEX.SOCK. HD.CAP SCR. DIN 912-M8x35-8.8-A3C	.2

STEYRMOTORS
INNOVATION WITH LIGHTNESS

84 MARINE TURBO DIESEL +SOLAS

PISTON, RINGS AND PIN, CONNECTION ROD

01044084-0

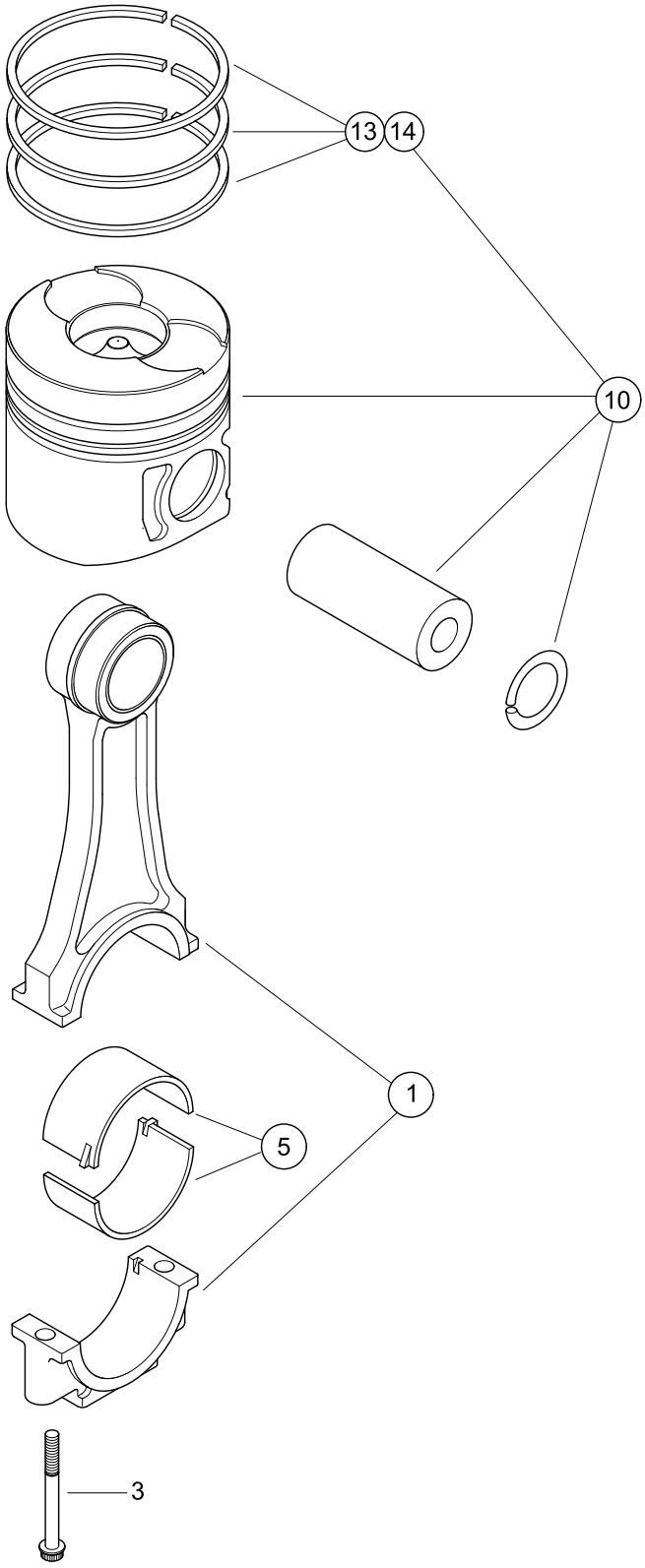

PISTON, RINGS AND PIN, CONNECTION ROD

84 MARINE TURBO DIESEL +SOLAS

01044084-0

Pos.	Part.-No.	Qty	Designation	Step
1	2178675-0	4	CONNECTING ROD ASSY.	.2
3	2178532-0	2	CONROD SCREW	..3
5	Z002055-1	4	BEARING ASSY. CONNECTING ROD	.2
10	Z002142-0	4	PISTON ASSY.	.2
13	Z002060-0	1	PISTON RING KIT (1 PER PISTON) —>48226118	..3
14	Z002060-2	1	PISTON RING KIT (1 PER PISTON) 48226119—>	..3

STEYRMOTORS
INNOVATION WITH LIGHTNESS

84 MARINE TURBO DIESEL +SOLAS

CAMSHAFT, HOUSING

01054084-0

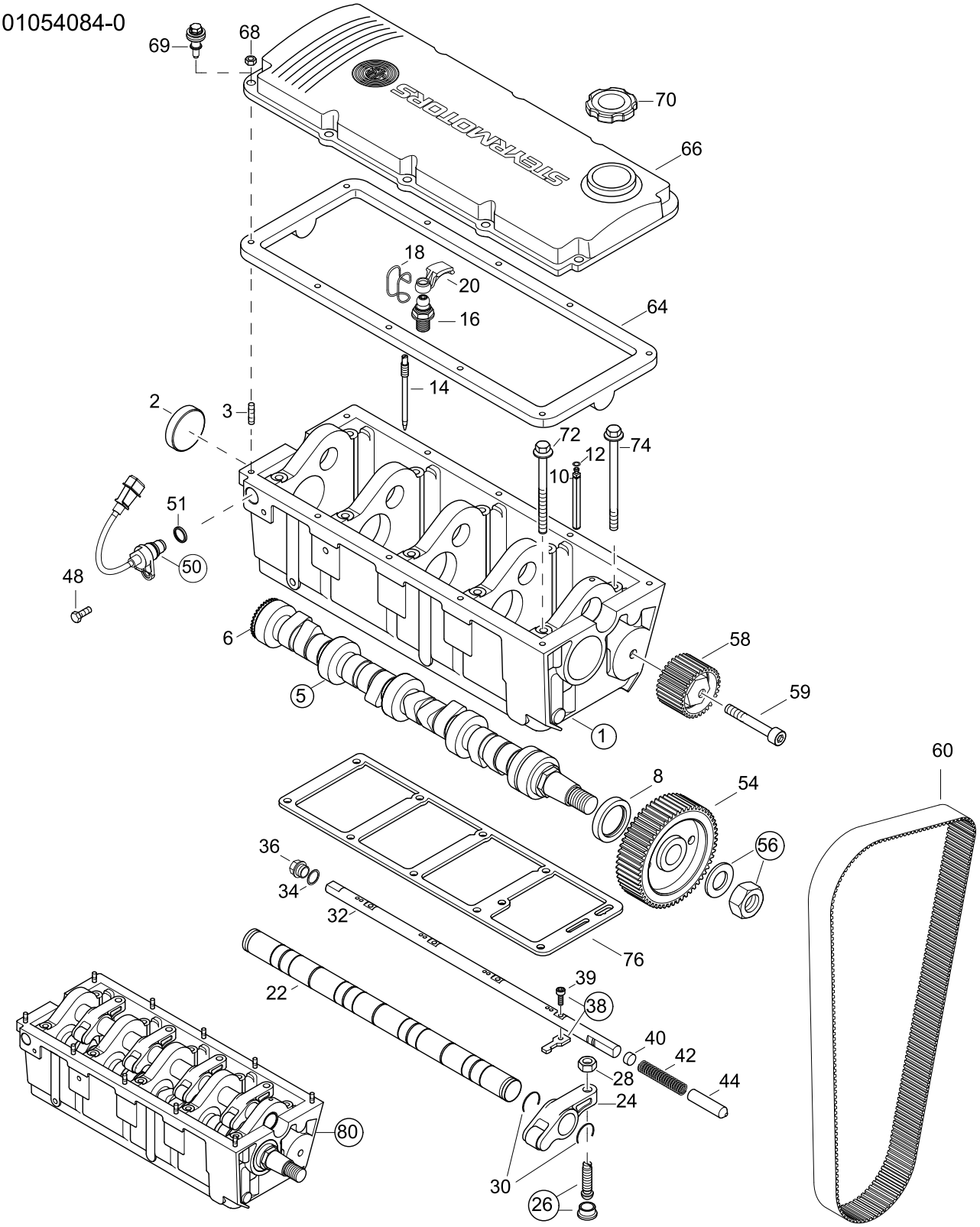

CAMSHAFT, HOUSING

84 MARINE TURBO DIESEL +SOLAS

01054084-0

Pos.	Part.-No.	Qty	Designation	Step
1	Z002407-0	1	CAMSHAFT HOUSING ASSY. (PAINTED)	.2
2	2178083-0	1	CORE HOLE PLUG 50-7	..3
3	2309101-0	10	STUD DIN 835-M6x25-A2-70 —>482300551	..3
5	2203267-6	1	CAMSHAFT ASSY.	.2
6	2203280-1	1	SENSOR DISK	..3
8	2172086-1	1	ROTARY SHAFT SEAL	.2
10	2178486-1	1	AXLE SUPPORT	.2
12	2178498-0	1	QUAD RING 1,78 x 5,28	.2
14	2177513-2	1	GUIDE PIN CONTROL RACK	.2
16	2174546-2	8	VALVE TAPPET ADJ. SCREW ASSY.	.2
18	2174552-0	8	RETAINING SPRING	.2
20	2177139-1	8	CAM FOLLOWER ASSY.	.2
22	2173694-1	1	ROCKER ARM SHAFT ASSY.	.2
24	Z002094-0	4	ROCKER ARM ASSY. (SPARE PART)	.2
26	Z002010-0	4	TAPPET ADJUSTER ASSY.	.2
28	3871310-0	4	HEX.NUT DIN 934-M10x1-8	.2
30	2174036-0	8	CRESCENT RING 28x1,5	.2
32	2203289-0	1	CONTROL ROD	.2
34	3098031-0	1	SEALING RING DIN 7603-A26x31-CU	.2
36	3962043-0	1	HEX.HD.SCR.PLUG DIN 7604-C-M26x1.5-ST-A3C	.2
38	Z002009-0	4	CONTROL LINK & BOLT	.2
39	3860140-0	1	HEX.SOCK. HD.CAP SCR. DIN 912-M5x20-LH-10.9	..3
40	2203337-0	1	SPACER	.2
42	2203338-0	1	SPRING, CONTROL ROD	.2
44	2203460-0	1	BOLT	.2
48	3800238-0	1	HEX.HD.SCR. ISO 4017-M6x12-A2-70	.2
50	2176734-2	1	REVOLUTION SENSOR	.2
51	2176729-0	1	O-RING 17,17 x 1,78	..3
54	2177642-0	1	TIMING BELT PULLEY CAMSHAFT	.2
56	Z002011-0	1	NUT & WASHER, CAMSHAFT PULLEY	.2
58	2178548-5	1	IDLER PULLEY ASSY.	.2

STEYRMOTORS
INNOVATION WITH LIGHTNESS

84 MARINE TURBO DIESEL +SOLAS

CAMSHAFT, HOUSING

01054084-0

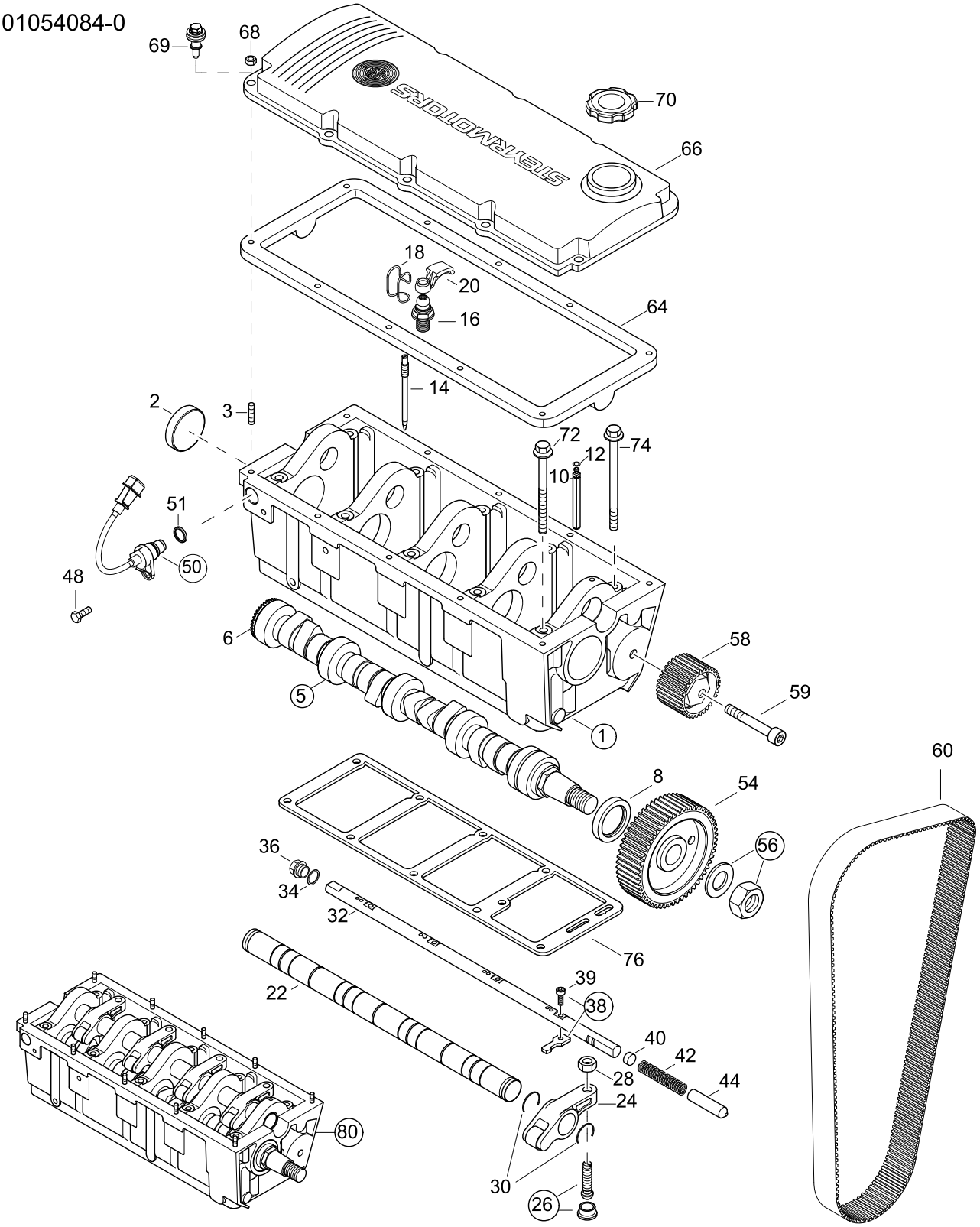

CAMSHAFT, HOUSING

84 MARINE TURBO DIESEL +SOLAS

01054084-0

Pos.	Part.-No.	Qty	Designation	Step
59	3860155-0	1	HEX.SOCK. HD.CAP SCR. DIN 912-M10x70-10.9-DAC A500	.2
60	2178073-1	1	TIMING BELT	.2
64	2040184-0	1	VALVE-COVER GASKET	.2
66	2203725-9	1	VALVE COVER, SILVER	.2
68	3880049-0	10	HEX.FLANGE NUT DIN 6923-M6-A2-70 —>482300551	.2
69	2040575-0	10	SCREW, COVER ACOUSTIC DECOUPLED 482300552—>	.2
70	2203509-0	1	FILLER CAP ENGINE OIL	.2
72	9000248-1	5	HEX.FLANGE BOLT EN 1665-M8x110-10.9-A2C	.2
74	9000249-1	5	HEX.FLANGE BOLT EN 1665-M8x130-10.9-A2C	.2
76	2203390-3	1	SEAL CAMSHAFT HSG - CYL.BLOCK	.2
80	Z002407-1	1	PART. CAMSHAFT HSG POS. 1 - 44 (PAINTED)	.2

STEYRMOTORS
INNOVATION WITH LIGHTNESS

84 MARINE TURBO DIESEL +SOLAS

OILPUMP, OILPIPE, OILPAN

01064084-0

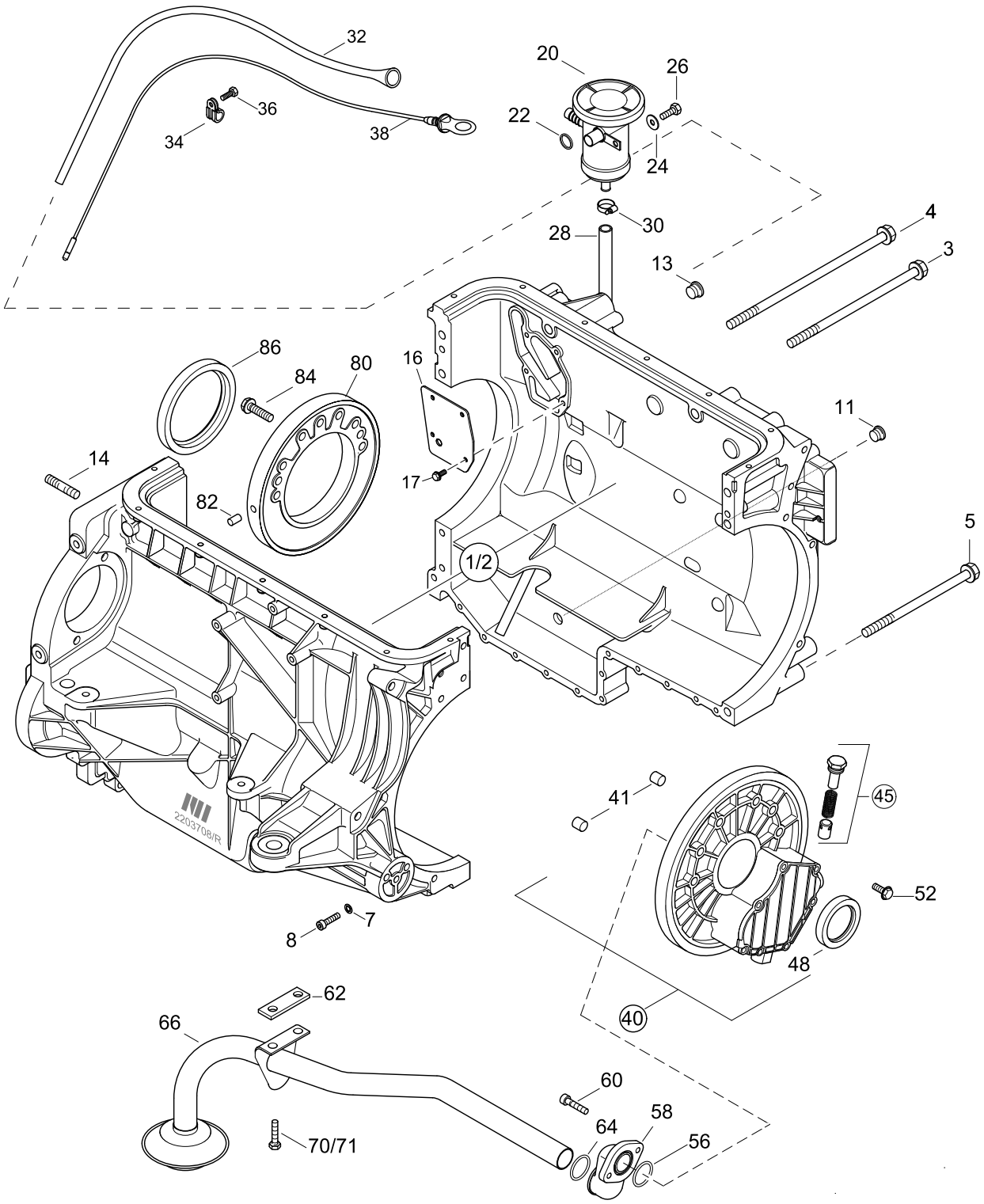

OILPUMP, OILPIPE, OILPAN

84 MARINE TURBO DIESEL +SOLAS

01064084-0

Pos.	Part.-No.	Qty	Designation	Step
1	Z002424-0	1	ENGINE HSG ASSY. (W. PIPE OIL DIPSTICK) —>482330249	.2
2	Z024014-0	1	ENGINE HSG ASSY. (W. PIPE OIL DIPSTICK) 482330250—>	.2
3	9000464-0	2	HEX.FLANGE BOLT EN 1665-M10x200-8.8-A3C	.3
4	9000463-0	2	HEX.FLANGE BOLT EN 1665-M10x250-8.8-A3C	.3
5	9000392-0	3	HEX.FLANGE BOLT EN 1665-M10x160-8.8-A3C	.3
7	3932008-0	11	SPRING WASHER DIN 137-B6-FST-A3C	.3
8	3862352-0	11	HEX.SOCK. HD.CAP SCR. ISO 4762-M6x50-8.8-A2C	.3
11	9000588-0	1	HEX.SOCK.SCR.PLUG WITH RUBBER SEAL M16x1,5	.3
13	9000590-0	1	HEX.SOCK.SCR.PLUG WITH RUBBER SEAL M22x1,5	.3
14	9000000-0	1	STUD DIN 939-M8x25-A2-70	.3
16	2203738-0	1	COVER PRE OIL SEPARATOR	.3
17	9000287-0	4	HEX.FLANGE BOLT EN 1665-M6x12-8.8-A3C	.3
20	Z002051-0	1	OIL SEPARATOR	.2
22	2178310-1	1	O-RING 17x3,53	.2
24	9000012-0	1	WASHER LARGE SERIES ISO 7093-6.4-140HV-A2	.2
26	3800221-0	1	HEX.HD.SCR. ISO 4017-M6x20-A2-70	.2
28	2178287-0	1	HOSE, OIL DRAIN	.2
30	2174405-0	2	HOSE CLAMP 10-16/7,5	.2
32	2203757-0	1	PIPE OIL-DIPSTICK	.2
34	2178566-0	1	PIPE CLAMP RSGU1.15/15-W5	.2
36	3800233-0	1	HEX.HD.SCR. ISO 4017-M6x16-A2-70	.2
38	2203751-0	1	OIL DIP STICK ASSY	.2
40	Z002429-0	1	OIL PUMP ASSY. (PAINTED)	.2
41	2170298-0	2	FITTING SLEEVE	.3
45	Z002005-6	1	RELIEF VALVE, OIL PUMP 4 CYL.	.3
48	2170276-1	1	ROTARY SHAFT SEAL	.3
52	9000278-0	6	HEX.FLANGE BOLT EN 1665-M8x35-8.8-A2C	.2
56	2040153-0	1	O-RING 25.12x1.78	.2
58	2040004-Z	1	OIL SUCTION MANIFOLD	.2
60	3862320-0	2	HEX.SOCK. HD.CAP SCR. ISO 4762-M6x20-8.8-A2C	.2
62	2203513-1	1	SPACER, PIPE OIL SUCTION —>48223068	.2

STEYRMOTORS
INNOVATION WITH LIGHTNESS

84 MARINE TURBO DIESEL +SOLAS

OILPUMP, OILPIPE, OILPAN

01064084-0

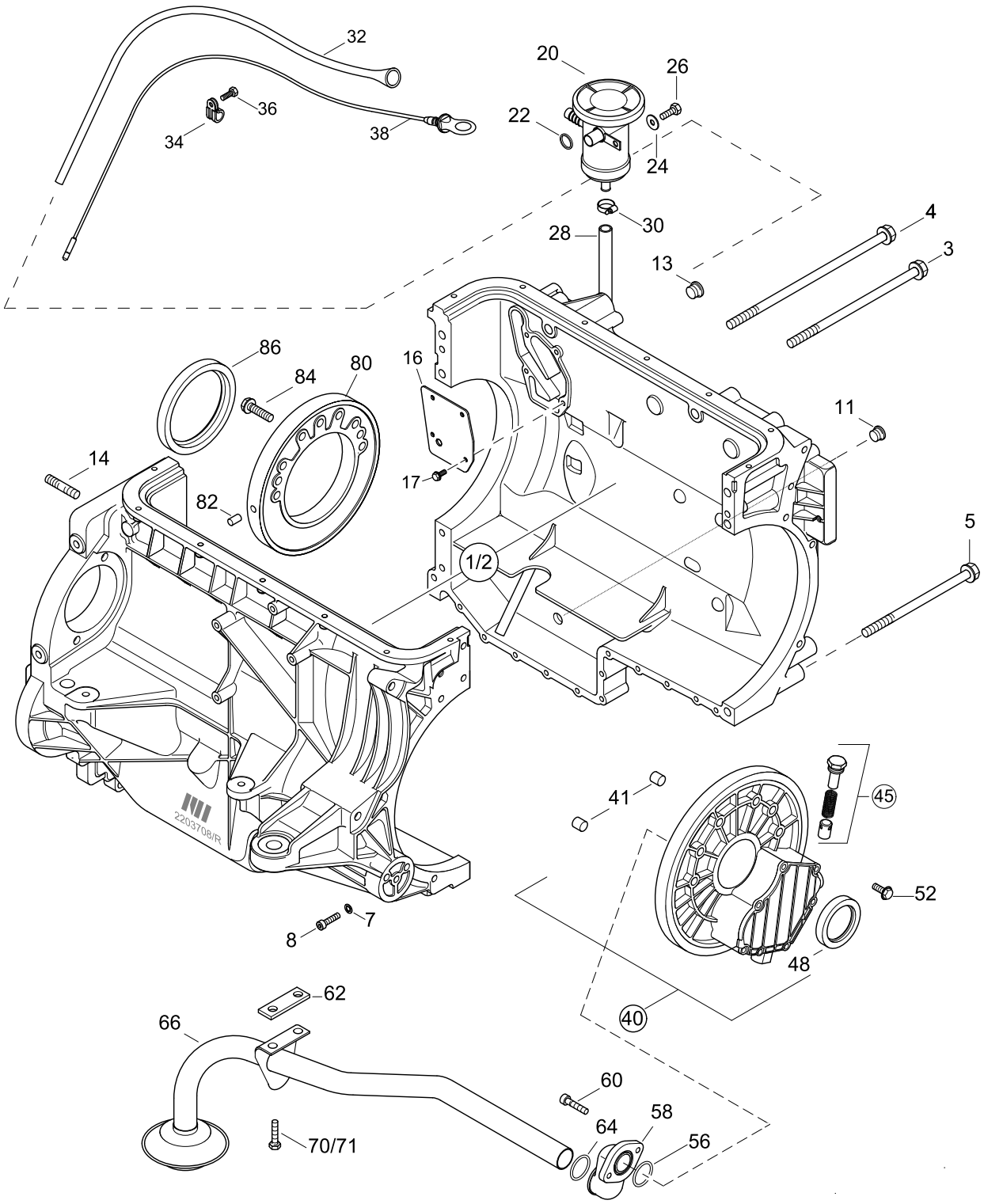

OILPUMP, OILPIPE, OILPAN

84 MARINE TURBO DIESEL +SOLAS

01064084-0

Pos.	Part.-No.	Qty	Designation	Step
64	2173705-1	1	O-RING 21,82x3,53	.2
66	2203718-1	1	PIPE OIL SUCTION	.2
70	3802321-0	2	HEX.HD.SCR. ISO 4017-M6x16-8.8-A2C —>48223068	.2
71	9000287-0	2	HEX.FLANGE BOLT EN 1665-M6x12-8.8-A3C 48233069—>	.2
80	2172855-1	1	SUPPORT RING, REAR	.2
82	3901416-0	1	PARALLEL PIN ISO 2338-8m6x16-ST	.2
84	9000278-0	7	HEX.FLANGE BOLT EN 1665-M8x35-8.8-A2C	.2
86	2172289-1	1	ROTARY SHAFT SEAL	.2

STEYRMOTORS
INNOVATION WITH LIGHTNESS

84 MARINE TURBO DIESEL +SOLAS

INTAKE MANIFOLD

01084034-1

TILL --> 482309999

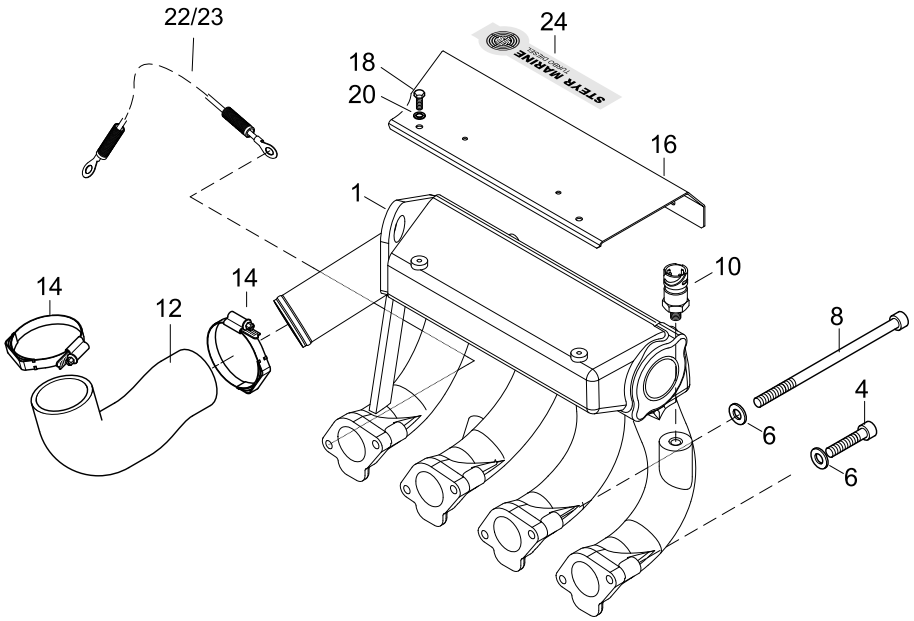

FROM 482310001 -->

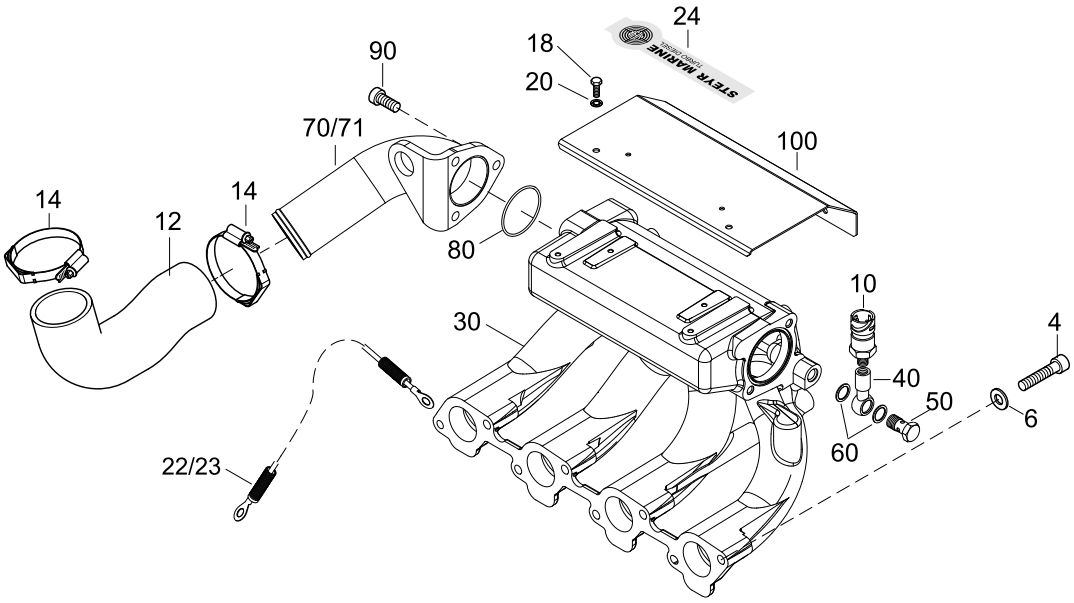

INTAKE MANIFOLD

84 MARINE TURBO DIESEL +SOLAS

01084034-1

Pos.	Part.-No.	Qty	Designation	Step
1	Z002431-0	1	INTAKE MANIFOLD ASSY.(PAINTED)	.2
4	3862447-0	6	HEX.SOCK. HD.CAP SCR. DIN 912-M8x45-8.8-A2C	.2
6	3930103-0	8	WASHER DIN 125-8.4-140HV-A2	.2
8	9000444-0	2	HEX.SOCK. HD.CAP SCR. DIN 912-M8x180-8.8 DAC	.2
10	2206305-0	1	PRESSURE SENSOR 1-8 27 NPT	.2
12	2203830-0	1	CHARGE AIR HOSE	.2
14	2179050-0	2	HOSE CLAMP WITH SPRING 40-60/9	.2
16	2203838-0	1	COVERPLATE-INTAKE MANIFOLD	.2
18	3800304-0	4	HEX.HD.SCR. IS0 4017-M5x12-A2-70	.2
20	3930069-0	4	WASHER ISO 7089-5-200HV-A2	.2
22	2206210-1	1	GROUND WIRE ASSY. —>482290263	.2
23	2178968-0	1	GROUND WIRE ASSY. 482290264—>	.2
24	2203799-8	1	STICKER „STEYR 84 MARINE“	.2
30	Z024005-0	1	INTAKE MANIFOLD ASSY.(PAINTED)	.2
40	2203772-0	1	BRACKET OIL PRESSURE SENSOR	.2
50	11868	1	HOLLOW SCREW M12x1,5 DIN 7643-8-3-A3C	.2
60	3098013-0	2	SEALING RING DIN 7603-A12x18-CU	.2
70	2179808-0	1	CONNECTING PIECE AIR INTAKE	.2
80	2179524-0	1	O-RING 54x2	.2
90	3862428-0	3	HEX.SOCK. HD.CAP SCR. DIN 912-M8x25-8.8-A2C	.2
100	2203838-1	1	COVERPLATE, INTAKE MANIFOLD	.2

STEYRMOTORS
INNOVATION WITH LIGHTNESS

84 MARINE TURBO DIESEL +SOLAS

POWER TAKE OFF FRONT

01094084-0

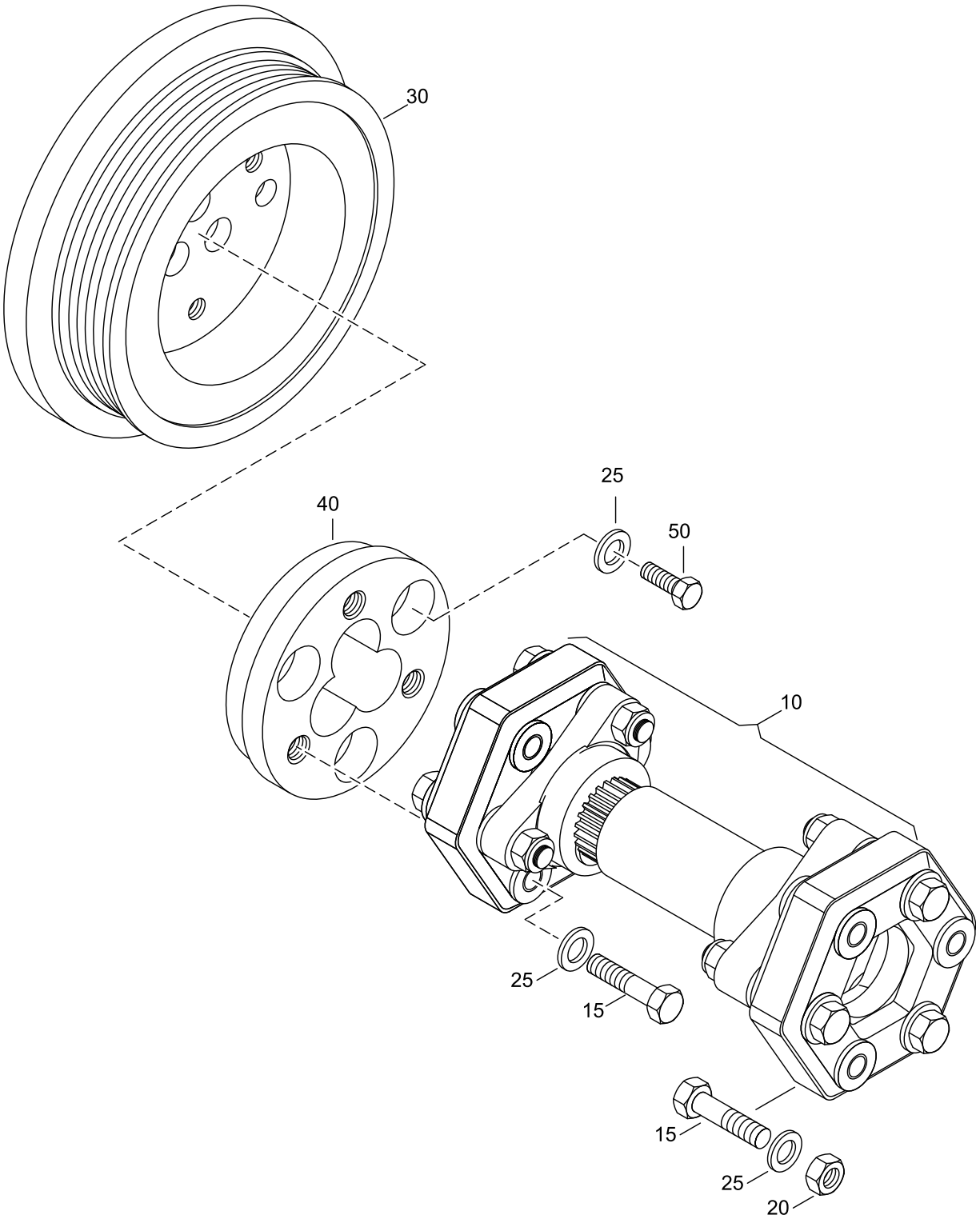

POWER TAKE OFF FRONT

84 MARINE TURBO DIESEL +SOLAS

01094084-0

Pos.	Part.-No.	Qty	Designation	Step
10	2205329-0	1	ELASTIC SHAFT L=130-158	.2
15	3802451-0	6	HEX.HD.SCR. ISO 4017-M8x50-8.8-A2C	.2
20	3888722-0	3	HEX.NUT,PREVG.TORQUE DIN 985-M8-A2C	.2
25	3930103-0	9	WASHER DIN 125-8.4-140HV-A2	.2
30	2203779-0	1	TORSIONAL VIBRATION DAMPER-PTO	.2
40	2203787-0	1	FLANGE - PTO	.2
50	3802432-0	3	HEX.HD.SCR. ISO 4017-M8x30-8.8-A2C	.2

STEYRMOTORS
INNOVATION WITH LIGHTNESS

84 MARINE TURBO DIESEL +SOLAS

OILCOOLER

01134084-0

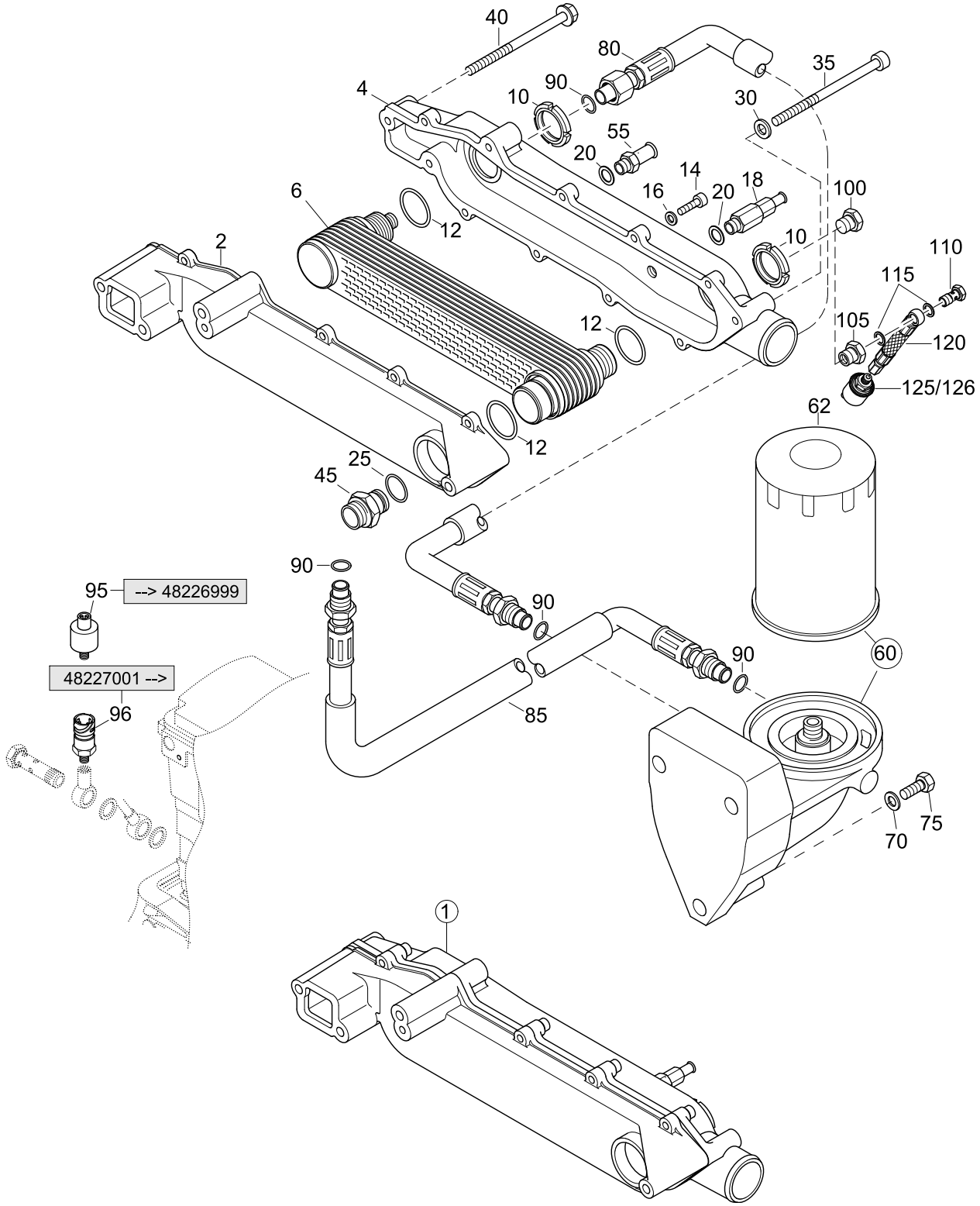

OILCOOLER

84 MARINE TURBO DIESEL +SOLAS

01134084-0

Pos.	Part.-No.	Qty	Designation	Step
1	Z002402-0	1	OIL COOLER ASSY. 4 CYL. MARINE (PAINTED)	.2
2	2203260-9	1	HOUSING OIL COOLER, PAINTED	..3
4	2203262-9	1	COVER OIL COOLER, PAINTED	..3
6	2178632-1	1	OIL COOLER CARTRIDGE	..3
10	9000315-0	2	GROOVE NUT DIN 70852-M30x1.5-14H-A3C	..3
12	2177741-0	3	O-RING 32,92 x 3,53	..3
14	3862327-0	7	HEX.SOCK. HD.CAP SCR. DIN 912-M6x25-8.8-A2C	..3
16	3932008-0	7	SPRING WASHER DIN 137-B6-FST-A3C	..3
18	2178598-0	1	DRAIN COCK ASSY.	..3
20	9000786-0	1	DICHTRING DIN 7603-A12x16-CU	..3
25	2177742-1	1	O-RING 25 x 3,53	.2
30	3930103-0	2	WASHER DIN 125-8.4-140HV-A2	.2
35	9000312-0	2	HEX.SOCK. HD.CAP SCR. DIN 912-M8x120-8.8-A2C	.2
40	9000248-1	3	HEX.FLANGE BOLT EN 1665-M8x110-10.9-A2C	.2
45	Z002127-0	1	SPARE P. BUSHING, OIL COOLER	.2
55	2178698-0	1	NIPPLE HEATER ON OILCOOLER (ACCESSORY)	.2
60	Z002403-0	1	OIL FILTER & COVER ASSY. PAINTED	.2
62	2178582-1	1	OIL FILTER CARTRIDGE	..3
70	3930103-0	3	WASHER DIN 125-8.4-140HV-A2	.2
75	3862452-0	3	HEX.SOCK. HD.CAP SCR. DIN 912-M8x50-8.8-A2C	.2
80	2203740-0	1	HOSE, FILTER-OIL COOLER	.2
85	2203741-0	1	HOSE, OILPUMP TO FILTER	.2
90	2176170-0	4	O-RING 15 x 2	.2
95	2206122-0	1	OIL PRESSURE SENSOR —>48226999	.2
96	2206305-0	1	PRESSURE SENSOR 1/8-27 NPT 48227001—>	.2
100	9000290-0	1	SCREW PLUG 1/4-18 NPTF	.2
105	2203819-0	1	SCREW PLUG 1/4-18 NPTF - M10x1	.2
110	9000010-1	1	HOLLOW SCREW M10x1	.2
115	3098011-0	2	SEALING RING DIN 7603-A10x16-CU	.2
120	Z002405-0	1	HOSE OIL PRESSURE SENSOR (ACCESSORY)	.2
125	Z002640-0	1	OIL PRESSURE SENSOR 2 WAY (ACCESSORY)	.2

STEYRMOTORS
INNOVATION WITH LIGHTNESS

84 MARINE TURBO DIESEL +SOLAS

OILCOOLER

01134084-0

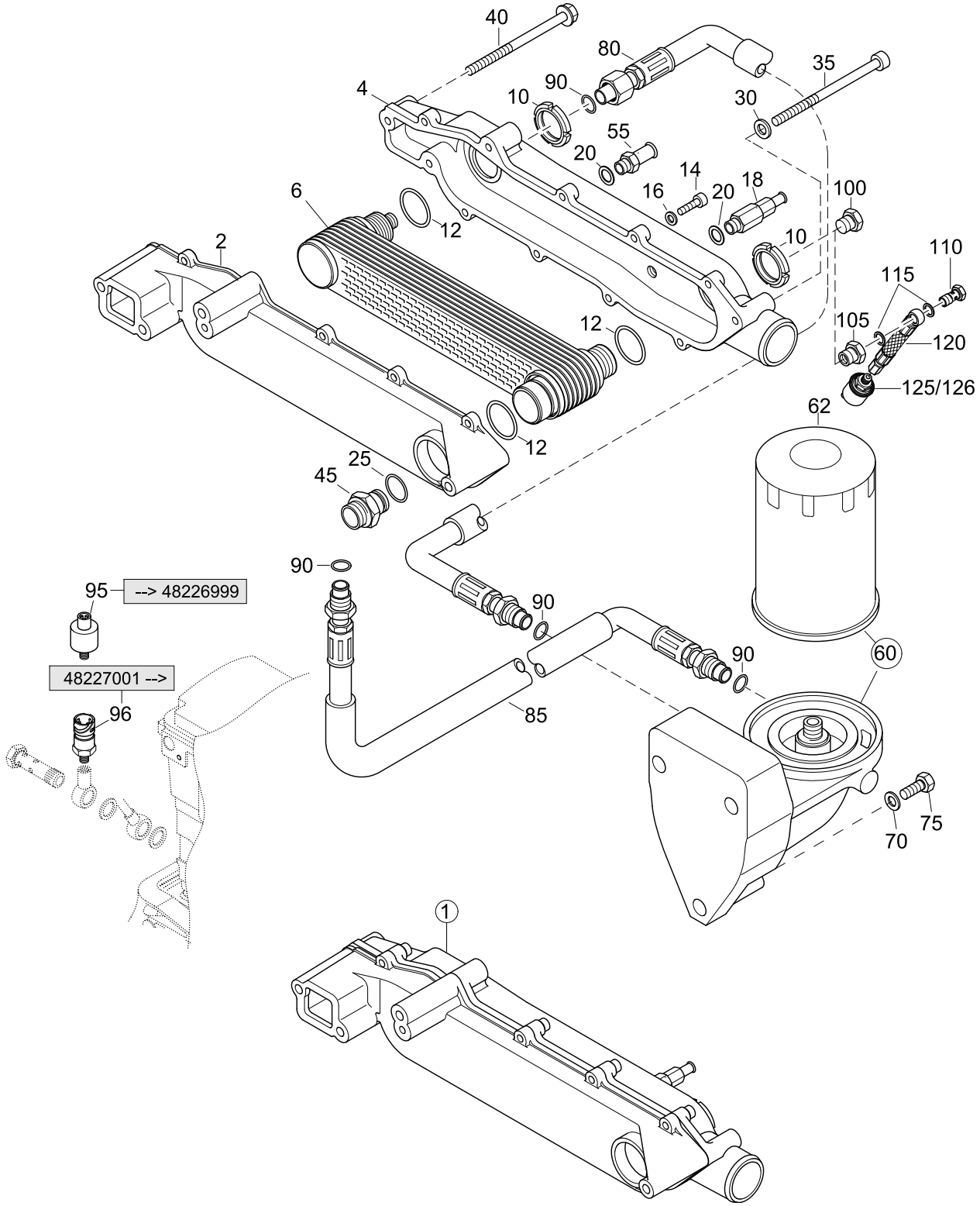

OILCOOLER

84 MARINE TURBO DIESEL +SOLAS

01134084-0

Pos.	Part.-No.	Qty	Designation	Step
126	Z002641-0	1	OIL PRESSURE SENSOR 2 WAY TWIN INSTR.PANEL (ACC)	.2

STEYRMOTORS
INNOVATION WITH LIGHTNESS

84 MARINE TURBO DIESEL +SOLAS

EXHAUST, HEAT EXCHANGER, GASKET

01144084-0

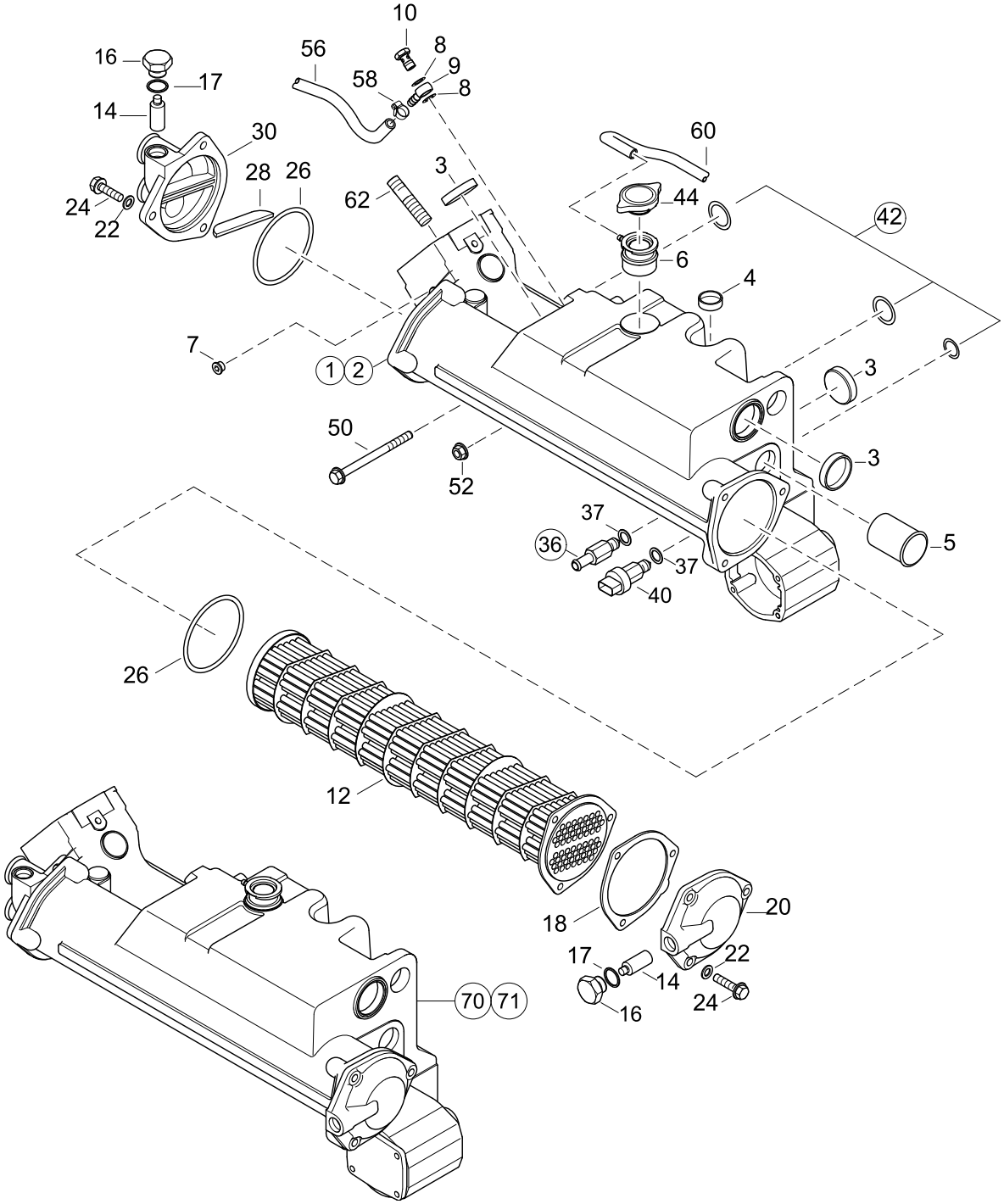

EXHAUST, HEAT EXCHANGER, GASKET

84 MARINE TURBO DIESEL +SOLAS

01144084-0

Pos.	Part.-No.	Qty	Designation	Step
1	2203703-0	1	EXHAUST MANIFOLD ASSY. PAINTED —>48227163	.2
2	Z002433-0	1	EXHAUST MANIFOLD ASSY. PAINTED 48227164—>	.2
3	2178112-0	3	CORE HOLE PLUG 40/8	..3
4	Z002048-0	9	CORE PLUG WITH O-RING	..3
5	2174617-0	1	PIPE FITTING	..3
6	2178331-0	1	FILLER NECK	..3
7	2170217-0	1	SCREW PLUG M10x1	..3
8	3098011-0	4	SEALING RING DIN 7603-A10x16-CU	.2
9	2174384-1	2	BANJO DN6 DIN 7642	.2
10	9000010-1	2	HOLLOW SCREW M10x1 DIN 7643-6-3-S	.2
12	2203704-0	1	HEATEXCHANGER	.2
14	2178413-1	2	ZINC ANODE	.2
16	Z002017-0	2	PLUG & SEAL FOR ZINC-ANODE	.2
17	3098020-0	1	SEALING RING DIN 7603-A18x22-CU	..3
18	2174155-1	1	GASKET, HEAT EXCHANGER COVER	.2
20	2173510-9	1	COVER HEAT EXCHANGER, FRONT PAINTED	.2
24	9000431-0	6	HEX.FLANGE BOLT EN 1665-M8x30-10.9-DAC	.2
26	2173636-0	2	O-RING 90x3	.2
28	2174073-0	1	SEAL FOR HEAT EXCHANGER COVER	.2
30	2177450-9	1	COVER HEAT EXCHANGER REAR, PAINTED	.2
36	2178598-0	1	DRAIN COCK ASSY.	.2
37	3098013-0	2	SEALING RING DIN 7603-A12x18-CU	.2
40	2174623-3	1	COOLANT TEMPERATURE SENSOR	.2
42	Z002489-0	1	SEAL KIT, EXH.MANIF - BLOCK 4 CYL.MARINE (O-RINGS)	.2
44	2174693-7	1	FILLER CAP ENGINE COOLANT	.2
50	9000248-1	8	HEX.FLANGE BOLT EN 1665-M8x110-10.9-A2C	.2
52	3880049-0	2	HEX.FLANGE NUT DIN 6923-M6-A2-70	.2
56	2178552-1	1	HOSE L=275mm	.2
58	2174405-0	2	HOSE CLAMP 10-16/7,5 EN 10088-1	.2
60	2174682-0	1	HOSE, OVERFLOW	.2
62	2203778-0	4	STUD HEAT-RESISTANT STEEL DIN 940-M8FOx25	.2

STEYRMOTORS
INNOVATION WITH LIGHTNESS

84 MARINE TURBO DIESEL +SOLAS

EXHAUST, HEAT EXCHANGER, GASKET

01144084-0

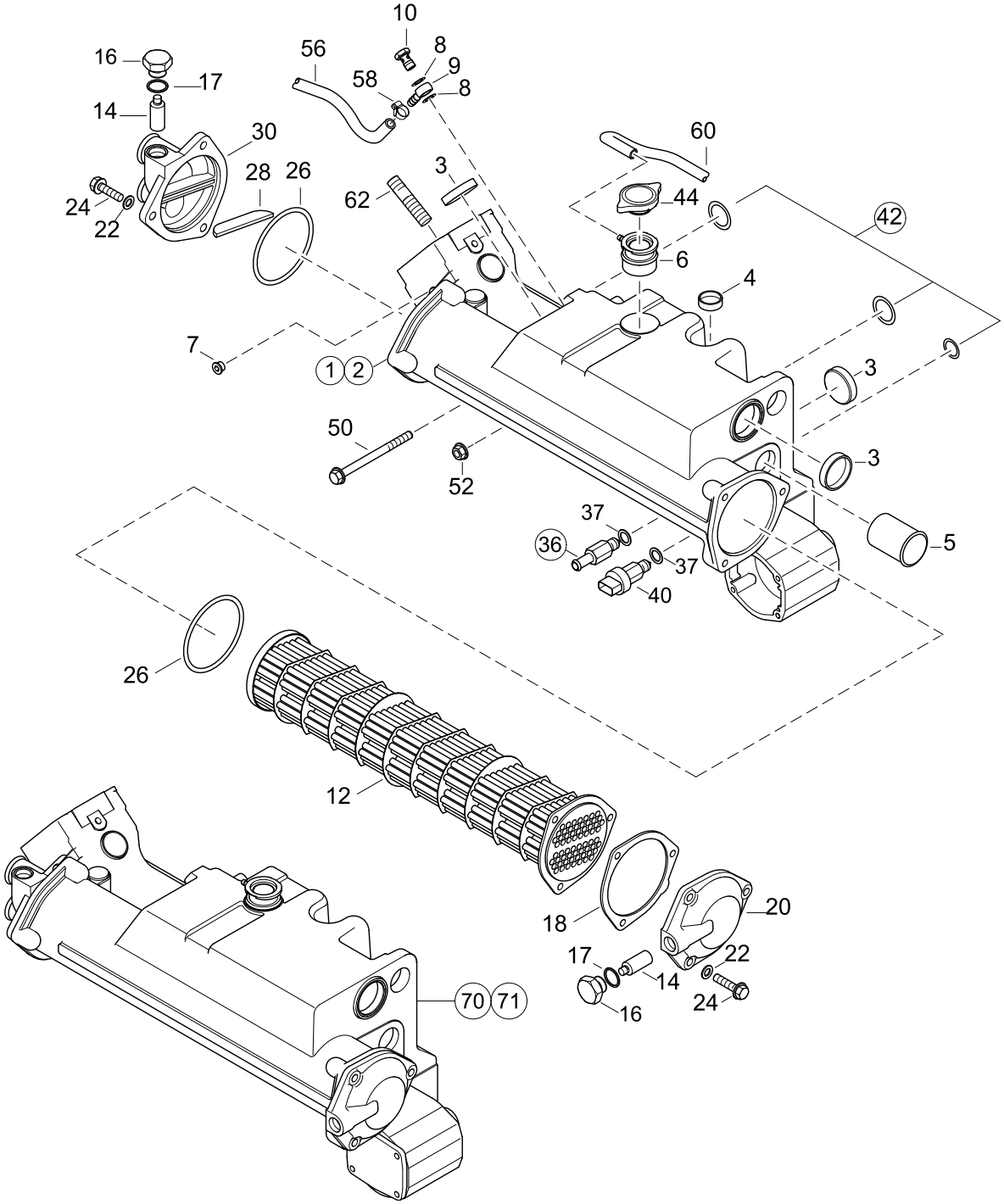

EXHAUST, HEAT EXCHANGER, GASKET

84 MARINE TURBO DIESEL +SOLAS

01144084-0

Pos.	Part.-No.	Qty	Designation	Step
70	Z002408-0	1	EXH. MANIFOLD COMPLETE (PAINTED) —>48227163	.2
71	Z002408-1	1	EXH. MANIFOLD COMPLETE (PAINTED) 48227164—>	.2

STEYRMOTORS
INNOVATION WITH LIGHTNESS

84 MARINE TURBO DIESEL +SOLAS

COUPLER

02014084-1

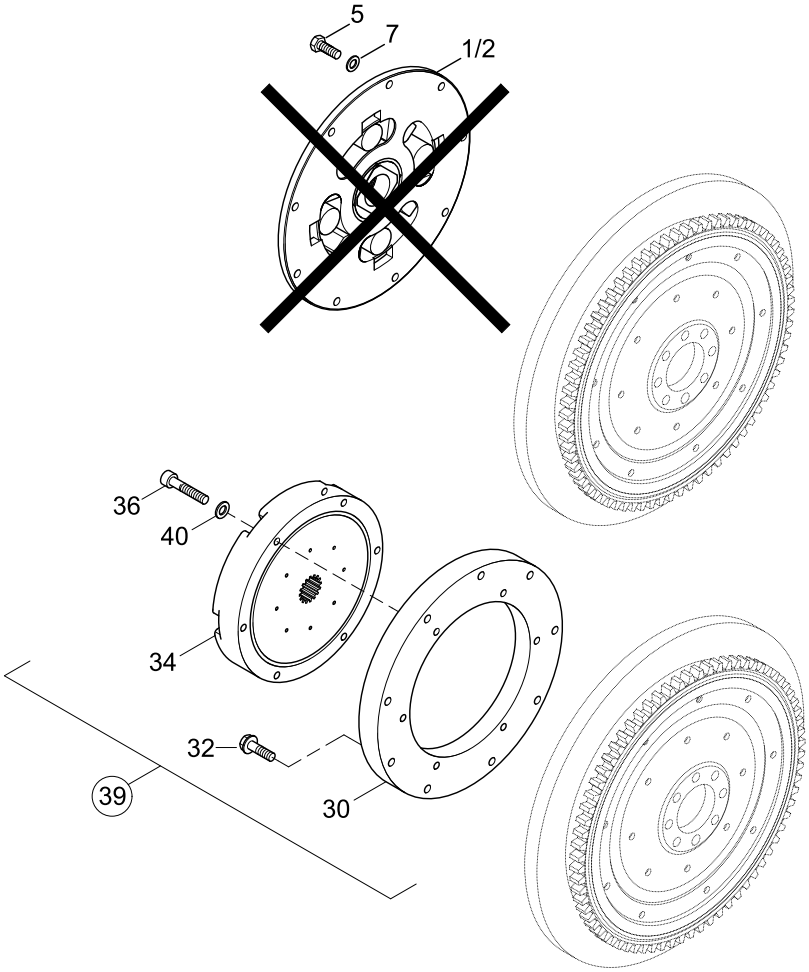

COUPLER

84 MARINE TURBO DIESEL +SOLAS

02014084-1

Pos.	Part.-No.	Qty	Designation	Step
1	2178860-X	1	COUPLING 20/40-26T (ZF) —> NEW NUMBER Z002066-V	.2
2	2178860-Y	1	COUPLING 16/32-17T (NEWAGE) —> NEW NUMBER Z002066-J	.2
5	3802424-0	9	HEX.HD.SCR. ISO 4017-M8x25-8.8-A2C	.2
7	3930103-0	9	WASHER DIN 125-8.4-140HV-A2	.2
30	2179163-0	1	ADAPTER RING, FLY WHEEL	.2
32	9000431-0	9	HEX.FLANGE BOLT EN 1665-M8x30-10.9-DAC	.2
34	2179164-0	1	COUPLER 20-40 26T	.2
36	9000520-0	6	HEX.SOCK. HD.CAP SCR. ISO 4762-M8x50-10.9-DAC	.2
39	Z002066-V	1	COUPLING KIT 20/40-26T F.GEAR & SCREWS	.2
40	3930103-0	6	WASHER DIN 125-8.4-140HV-A2	.2

STEYRMOTORS
INNOVATION WITH LIGHTNESS

84 MARINE TURBO DIESEL +SOLAS

FUEL PUMP, UNIT INJECTOR, PIPE

03024034-0

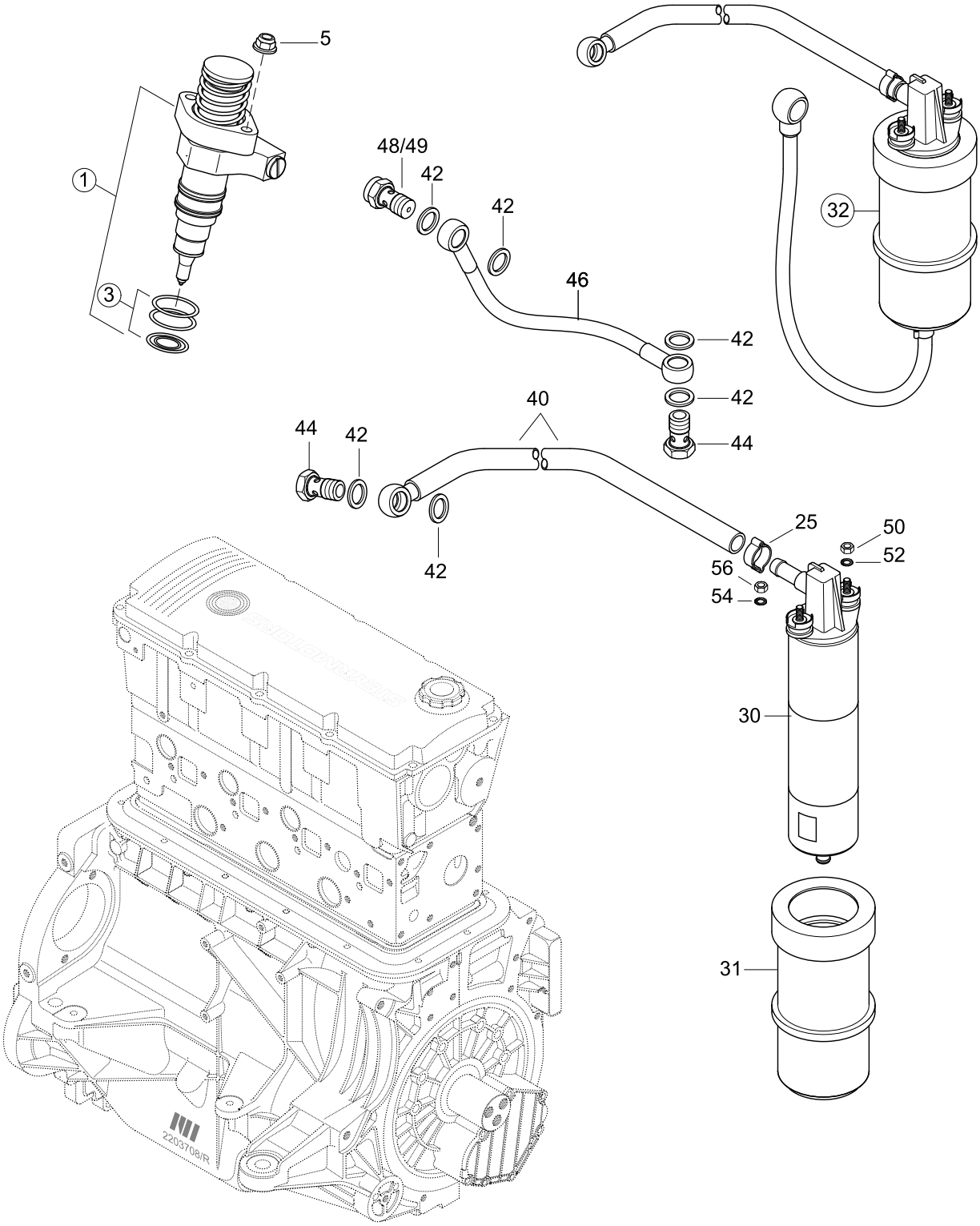

FUEL PUMP, UNIT INJECTOR, PIPE

84 MARINE TURBO DIESEL +SOLAS

03024034-0

Pos.	Part.-No.	Qty	Designation	Step
1	Z002030-5	4	UNIT INJECTOR ASSY 555/5 & SEAL RING	.2
3	Z002031-0	1	SEAL KIT, UNIT INJECTOR	..3
5	9000056-1	8	HEX.FLANGE NUT DIN 6923-M8-8-A2C	.2
25	2178995-0	1	HOSE CLAMP 17,5mm	.2
30	2173396-4	1	FUEL PUMP 12V (WITH ISOLATING SLEEVE)	.2
31	2173396-I	1	ISOLATING SLEEVE FUEL PUMP	.2
32	Z002054-1	1	FUEL PUMP ASSY & LINES	.2
40	2203766-1	1	FUEL HOSE PUMP/BLOCK	.2
42	3098015-0	6	SEALING RING DIN 7603-A14x20-CU	.2
44	9000053-0	2	HOLLOW SCREW M14x1,5 DIN 7643-10-DAC A500	.2
46	2203776-0	1	FUEL PIPE BLOCK-TANDEMCOOLER (KTL)	.2
48	2178561-1	1	OVERFLOW VALVE FUEL-CYLINDER BLOCK —>48224082	.2
49	2178572-1	1	HOLLOW SCREW THROTTLED 48224083—>	.2
50	3870050-0	1	HEX.NUT DIN 934-M5-A2-70	.2
52	9000040-0	1	TOOTHED LOCK WASHER EXTERN. DIN 6797-A5.3-1.4310	.2
54	9000039-0	1	TOOTHED LOCK WASHER EXTERN. DIN 6797-A4.3-1.4310	.2
56	3870051-0	1	HEX.NUT ISO 4032-M4-A2-70	.2

STEYRMOTORS
INNOVATION WITH LIGHTNESS

84 MARINE TURBO DIESEL +SOLAS

AIRFILTER

03044034-0

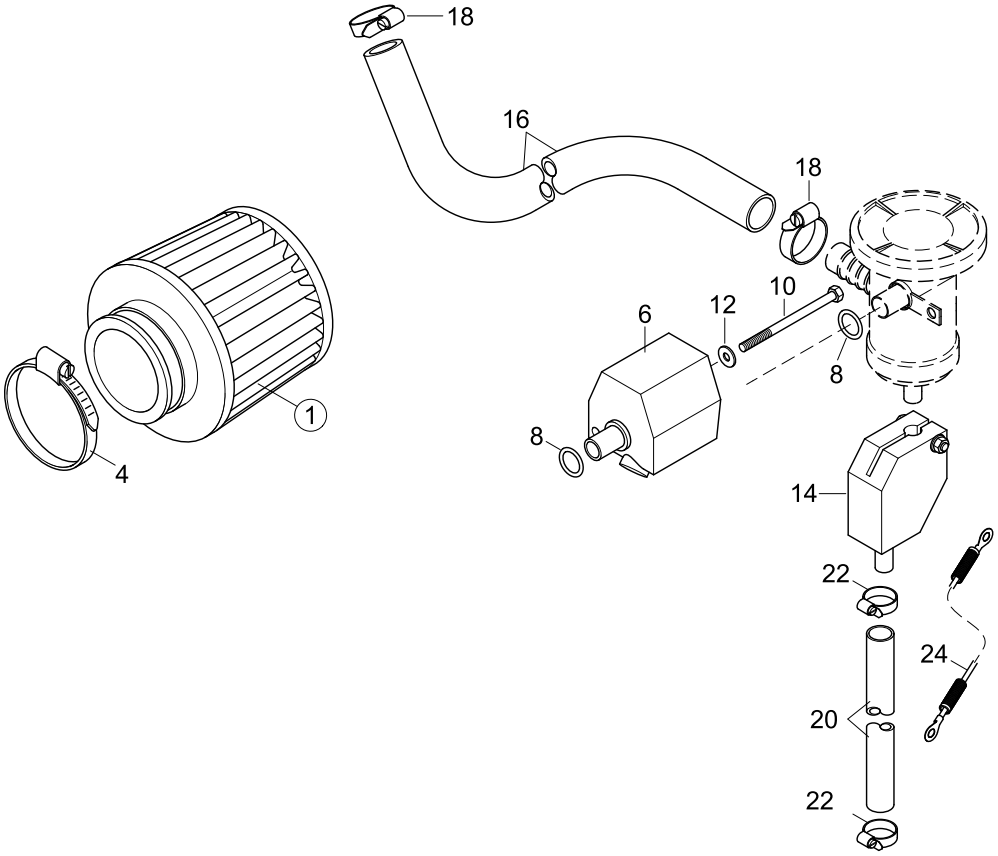

AIRFILTER

84 MARINE TURBO DIESEL +SOLAS

03044034-0

Pos.	Part.-No.	Qty	Designation	Step
1	Z002100-0	1	AIR FILTER DM70 + HOSE CLAMP	.2
4	2174417-1	1	HOSE CLAMP 70-90/9	..3
6	2179069-9	1	BALL VALVE ASSY. (PAINTED)	.2
8	2178310-1	2	O-RING 17 X 3,53	.2
10	9000452-0	1	HEX.HD.BOLT ISO 4014-M6x75-A2-70	.2
12	9000012-0	1	WASHER LARGE SERIES DIN 9021-6.4-140HV-A2	.2
14	2179070-9	1	BALL VALVE ASSY. (PAINTED)	.2
16	2178581-2	1	HOSE OIL SEPERATOR	.2
18	2177753-0	2	HOSE CLAMP 16-25/9	.2
20	2178287-1	1	HOSE, OIL DRAIN	.2
22	2174405-0	2	HOSE CLAMP 10-16/7,5	.2
24	2206210-1	1	GROUND WIRE ASSY.	.2

STEYRMOTORS
INNOVATION WITH LIGHTNESS

84 MARINE TURBO DIESEL +SOLAS

TURBOCHARGER

03054034-0

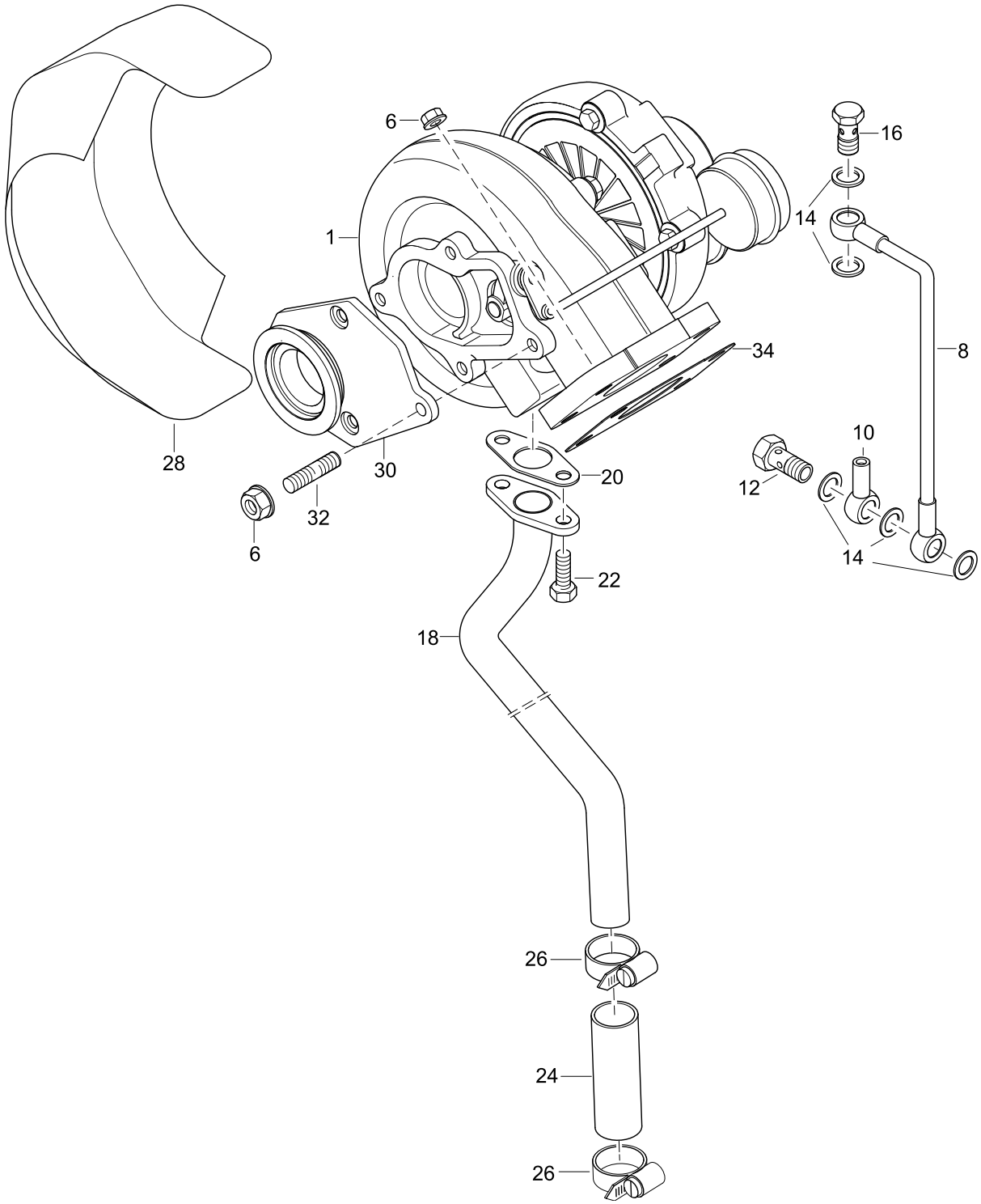

TURBOCHARGER

84 MARINE TURBO DIESEL +SOLAS

03054034-0

Pos.	Part.-No.	Qty	Designation	Step
1	Z002432-0	1	TURBO & BASE AIR FILTER ASSY. (PAINTED)	.2
6	2178640-0	9	HEX.FL. NUT, PREVG.TORQUE HEAT RESIST. EN 1664-M8-C2U-GA	.2
8	2203770-2	1	OIL INLET PIPE TURBOCHARGER	.2
10	2203772-0	1	BRACKET OIL PRESSURE SENSOR	.2
12	2203591-0	1	DOUBLE HOLLOW SCREW M12x1,5 DIN 7643-8	.2
14	3098013-0	5	SEALING RING DIN 7603-A12x18-CU	.2
16	11868	1	HOLLOW SCREW M12x1,5 DIN 7643-8-3-A3C	.2
18	2203760-0	1	PIPE OIL-RETURN ASSY.	.2
20	2203278-0	1	GASKET OIL-RETURN TURBOCHARGER	.2
22	3800233-0	2	HEX.HD.SCR. ISO 4017-M6x16-A2-70	.2
24	2178573-4	1	HOSE OIL-RETURN TURBOCHARGER	.2
26	2177753-0	2	HOSE CLAMP 16-25/9 EN 10088-1	.2
28	2203749-2	1	HEAT PROTECTING TURBO MARINE 4 CYL.	.2
30	2203833-1	1	FLANGE EXHAUST TURBO	.2
32	2178608-2	5	STUD HIGH TEMPERATURE RESISTANT DIN 939-M8x18	.2
34	2200309-1	1	GASKET TURBO CHARGER	.2

STEYRMOTORS
INNOVATION WITH LIGHTNESS

84 MARINE TURBO DIESEL +SOLAS

CONTR. SOLENOID, POTENTIOMETER

03084084-3

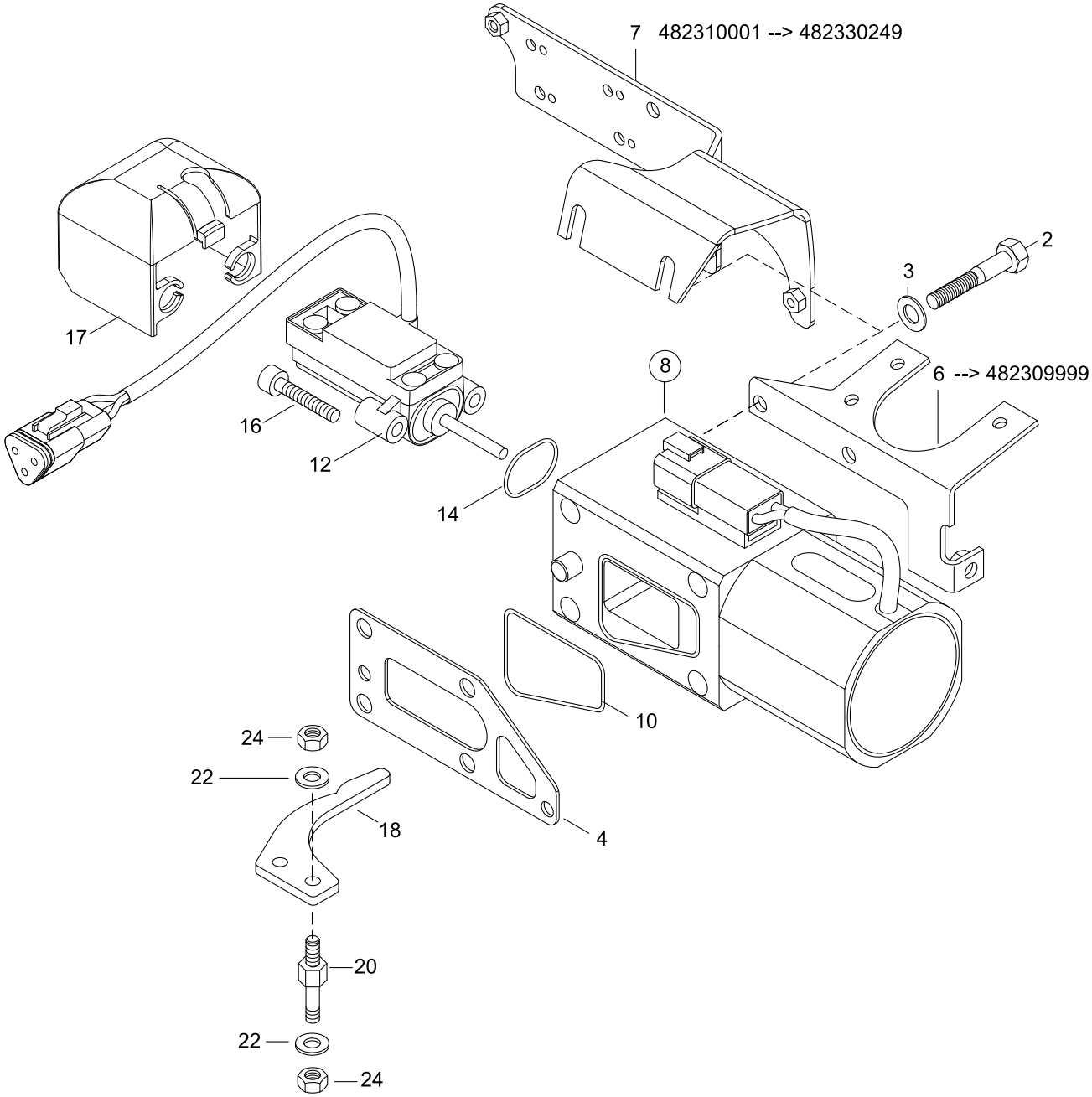

CONTR. SOLENOID, POTENTIOMETER

84 MARINE TURBO DIESEL +SOLAS

03084084-3

Pos.	Part.-No.	Qty	Designation	Step
2	9000446-1	4	HEX.HD.BOLT ISO 4014-M8x70-A4-70	.2
3	3930103-0	4	WASHER DIN 125-8.4-140HV-A2	.2
4	2205223-0	4	SEAL, SOLENOID (TILL 2006)	.2
6	2178955-1	1	BRACKET CONTROL SOLENOID —>48230999	.2
7	2178954-2	1	BRACKET CONTROL SOLENOID 482310001—>	.2
8	Z002153-0	1	CONTROL SOLENOID W. SENSOR CONTROL RACK POSITION	.2
10	2179707-0	1	O-RING 43x3,5	..3
12	Z002160-0	1	SENSOR, CONTROL RACK POSITION	..3
14	2179708-0	1	O-RING 18x1,5	..3
16	9000116-1	2	HEX.SOCK. HD.CAP SCR. DIN 912-M5x20-A2-70	..3
17	2179766-0	1	PROTECTING CAP, RACK-SENSOR	..3
18	2176745-2	1	CONTROL-LEVER	.2
20	2176746-1	2	DISTANCE-SHAFT	.2
22	3931062-0	4	SPRING LOCK WASHER DIN 127-B5-FST-A3C	.2
24	3871222-0	4	HEX.NUT ISO 4032-M5-8-A2C	.2

STEYRMOTORS
INNOVATION WITH LIGHTNESS

84 MARINE TURBO DIESEL +SOLAS

FUEL FILTER

03094084-1

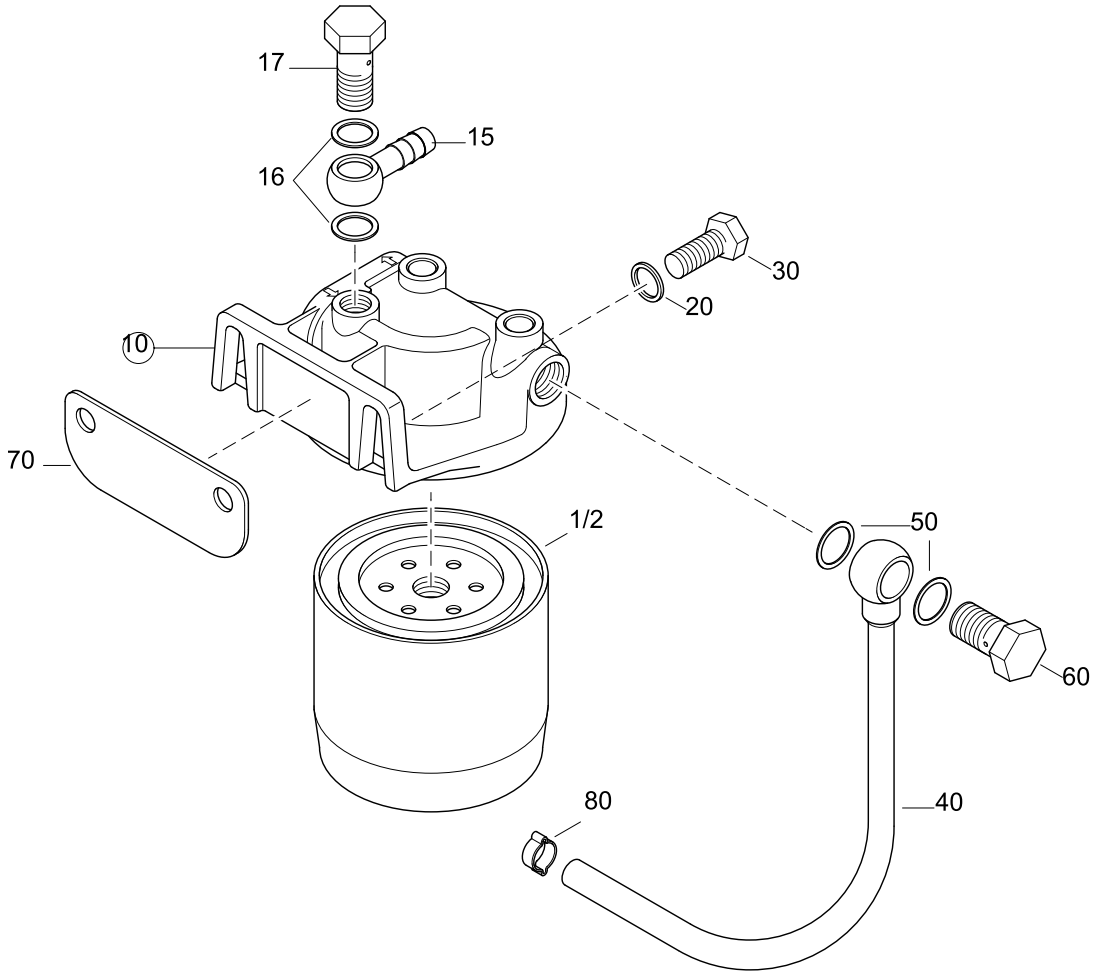

FUEL FILTER

84 MARINE TURBO DIESEL +SOLAS

03094084-1

Pos.	Part.-No.	Qty	Designation	Step
1	2203710-0	1	FUEL FILTER CARTIDGE SHORT	.2
2	2177745-1	1	FUEL FILTER CARTRIDGE	.2
10	Z002624-0	1	BRACKET FUEL-FILTER & BANJO FITTING (PAINTED)	.2
15	2174383-1	1	BANJO FITTING DN8 DIN 7642-A2C	..3
16	3098015-0	2	SEALING RING DIN 7603-A14x20-CU	..3
17	9000053-0	1	HOLLOW SCREW M14x1,5 DIN 7643-10-DAC A500	..3
20	3930075-0	2	WASHER DIN 125 A10.5-140HV-A2	.2
30	3802532-0	2	HEX.HD.SCR. ISO 4017-M10x35-8.8	.2
40	2203765-2	1	FUEL LINE FILTER-PUMP	.2
50	3098015-0	2	SEALING RING DIN 7603-A14x20-CU	.2
60	9000053-0	1	HOLLOW SCREW M14x1,5 DIN 7643-10-DAC A500	.2
70	2203736-2	1	RETAINING STRAP FUELPUMP	.2
80	2178995-0	1	HOSE CLAMP 17,5mm	.2

STEYRMOTORS
INNOVATION WITH LIGHTNESS

84 MARINE TURBO DIESEL +SOLAS

GLOW PIN

03114084-0

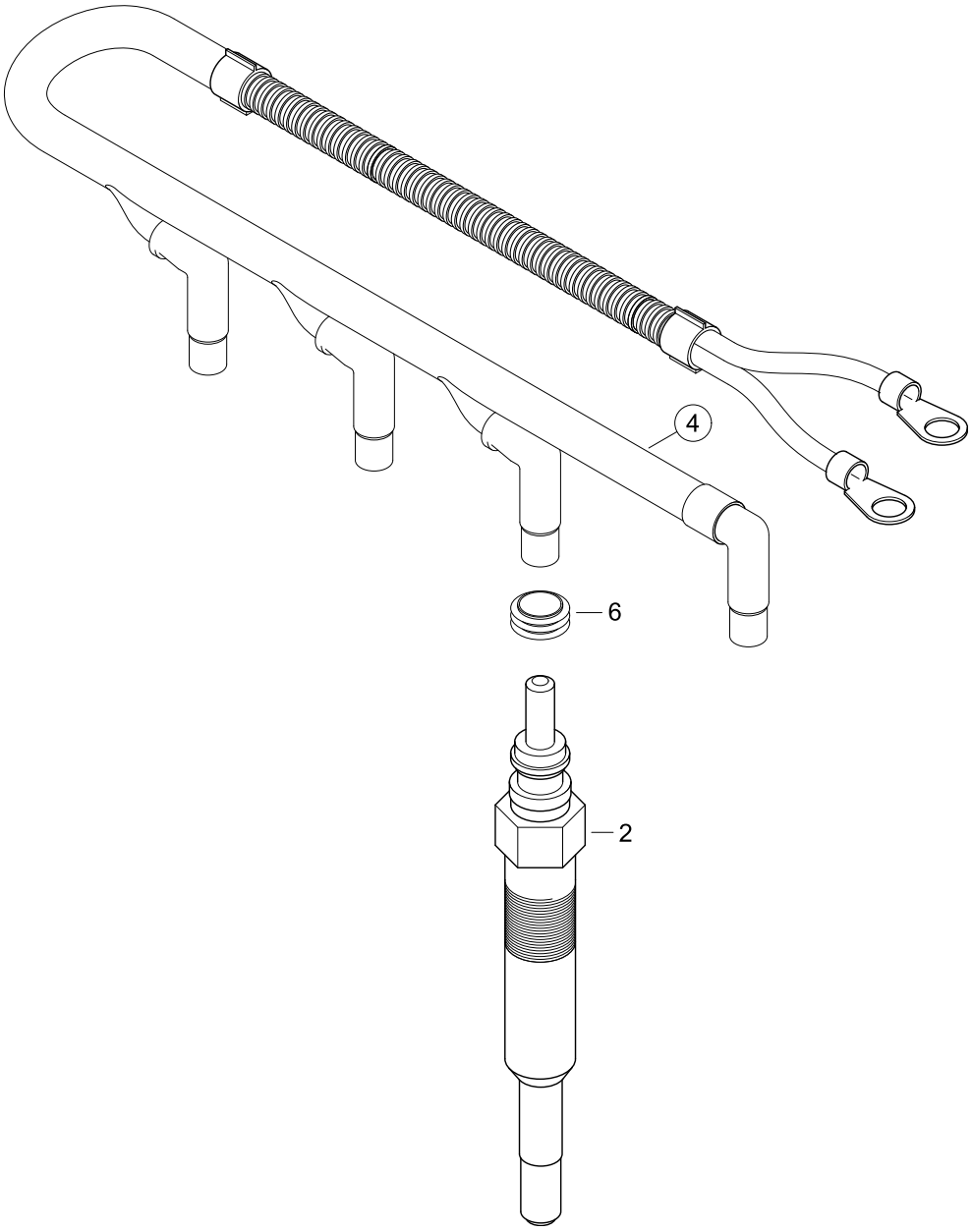

GLOW PIN

84 MARINE TURBO DIESEL +SOLAS

03114084-0

Pos.	Part.-No.	Qty	Designation	Step
2	2177492-5	4	GLOW PLUG	.2
4	2200215-4	1	CABLE GLOW-PLUG ASSY. 4 CYL.	.2
6	2179256-0	4	GASKET GLOW PLUG CONNECTOR	..3

STEYRMOTORS
INNOVATION WITH LIGHTNESS

84 MARINE TURBO DIESEL +SOLAS

POT. ACCELE., BOOST PRESSURE SENSOR

03124034-0

TILL --> 482309999

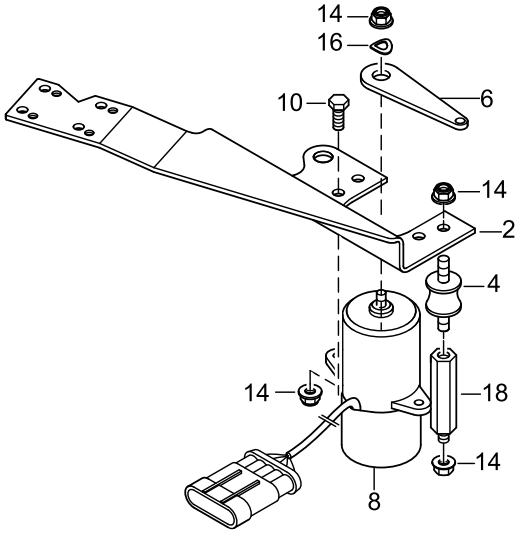

FROM 482310001 TILL --> 482330249

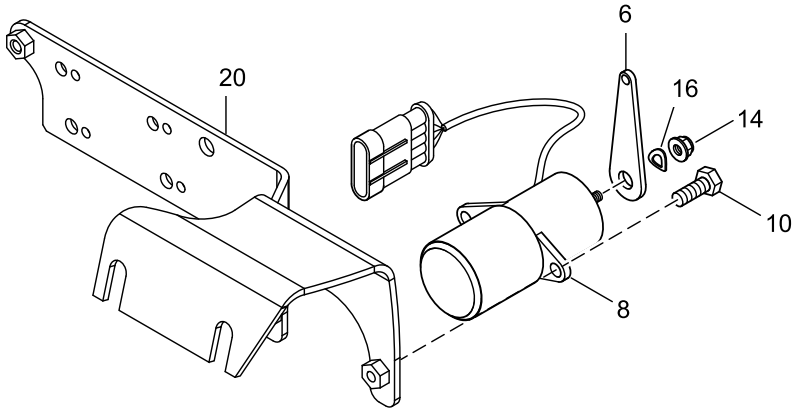

FROM 482330250 -->

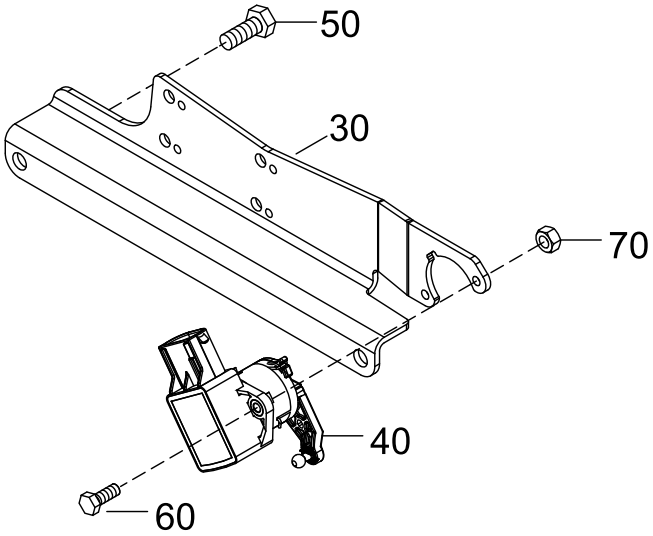

POT. ACCELE., BOOST PRESSURE SENSOR

84 MARINE TURBO DIESEL +SOLAS

03124034-0

Pos.	Part.-No.	Qty	Designation	Step
2	2178954-0	1	BRACKET POTENTIOMETER	.2
4	2203744-0	3	RUBBER MOUNT	.2
6	2203777-0	1	LEVER POTENTIOMETER	.2
8	2176860-1	1	POTENTIOMETER ACCELERATOR	.2
10	3800233-0	2	HEX.HD.SCR. ISO 4017-M6x16-A2-70	.2
14	3880049-0	9	HEX.FLANGE NUT EN 1661-M6-A2-70	.2
16	3932008-0	1	SPRING WASHER DIN 137-B6-FST-A3C	.2
18	2179143-0	3	DISTANCE BOLT	.2
20	2178954-2	1	BRACKET POTENTIOMETER	.2
30	2204053-0	1	BRACKET POTENTIOMETER	.2
40	2180847-0	1	POTENTIOMETER ACCELERATOR	.2
50	3800224-0	2	HEX.HD.SCR. ISO 4017-M8x20-A2-70	.2
60	2309129-0	2	HEX. SOCKET HEAD CAP SCREW ISO 4762-M4x12-A2-70	.2
70	3870051-0	2	HEX.NUT ISO 4032-M4-A2-70	.2

STEYRMOTORS
INNOVATION WITH LIGHTNESS

84 MARINE TURBO DIESEL +SOLAS

HIGH RISER, EXHAUSTPIPE

04016184-1

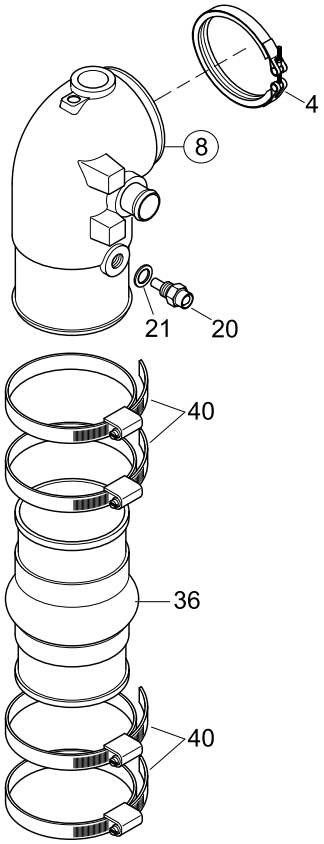

HIGH RISER, EXHAUSTPIPE

84 MARINE TURBO DIESEL +SOLAS

04016184-1

Pos.	Part.-No.	Qty	Designation	Step
4	2173297-0	1	CLAMP	.2
8	Z002095-0	1	ELBOW ASSY. EXHAUST (PAINTED)	.2
20	2174623-3	1	COOLANT TEMPERATURE SENSOR	.2
21	3098013-0	1	SEALING RING DIN 7603-A12x18-CU	.2
36	O913591-0	1	HOSE-EXHAUST PIPE	.2
40	2178943-0	4	HOSE CLAMP 90-110/12	.2

STEYRMOTORS
INNOVATION WITH LIGHTNESS

84 MARINE TURBO DIESEL +SOLAS

WATERPIPE, THERMOSTAT

05034084-0

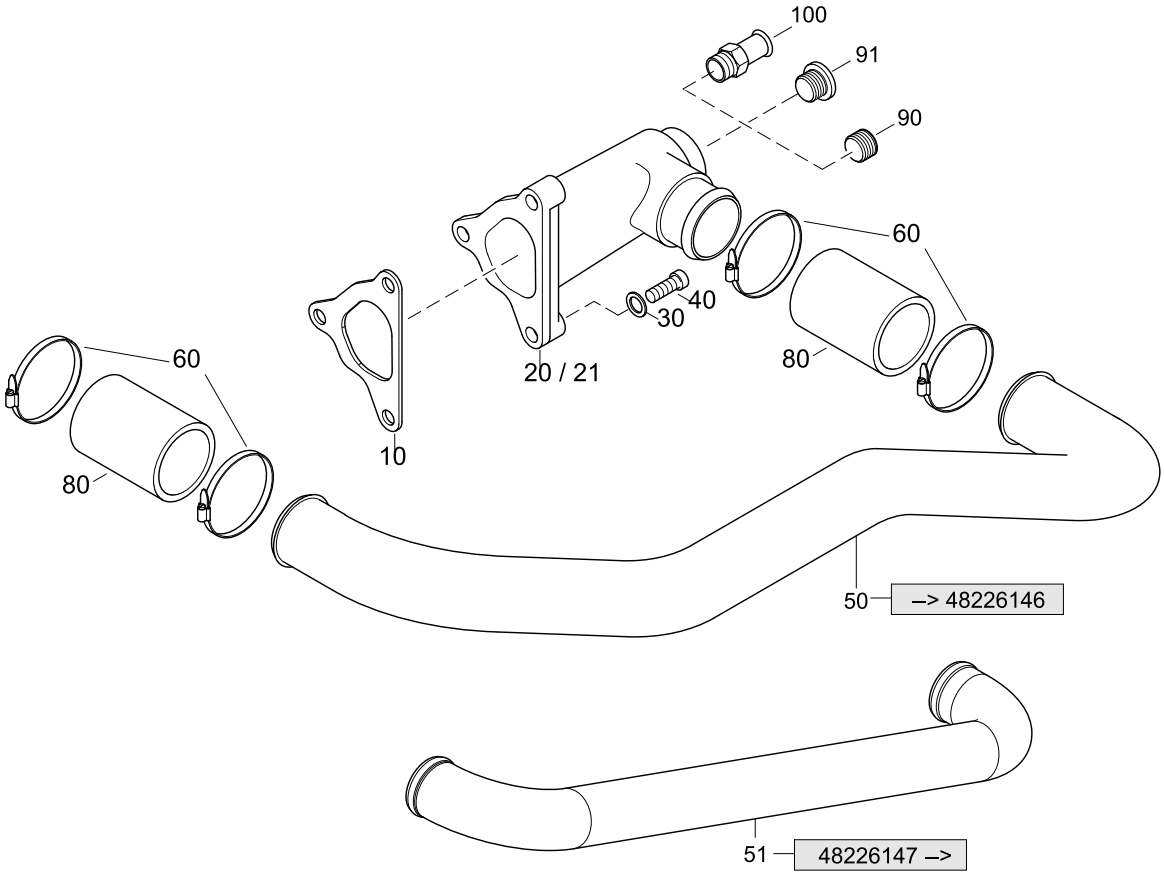

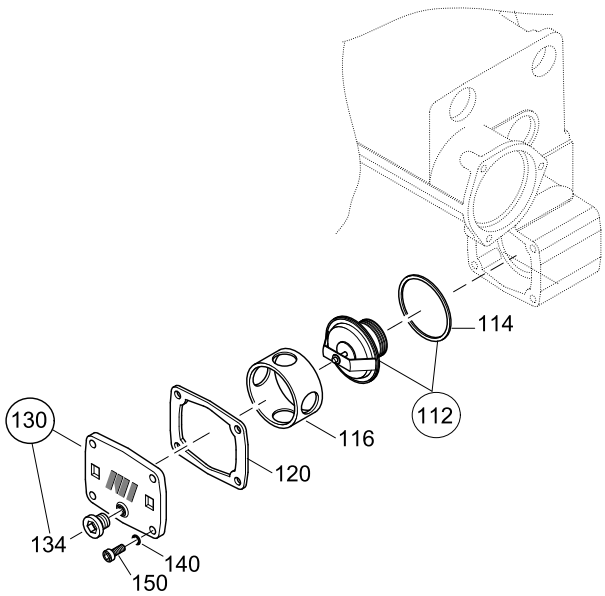

WATERPIPE, THERMOSTAT

84 MARINE TURBO DIESEL +SOLAS

05034084-0

Pos.	Part.-No.	Qty	Designation	Step
10	2177572-0	1	GASKET COOLANT MANIFOLD	.2
20	2177571-9	1	MANIF.COOLANT INLET, 1/2-14NPT PAINTED —>48218999	.2
21	2177571-7	1	COOLANT INLET ASSY. M22x1,5 (PAINTED) 48219001—>	.2
30	3932008-0	3	SPRING WASHER DIN 137-B6-FST-A3C	.2
40	3862327-0	3	HEX.SOCK. HD.CAP SCR. DIN 912-M6x25-8.8-A2C	.2
50	2203735-0	1	PIPE ENGINE-COOLANT —>48226146	.2
51	2203735-1	1	PIPE ENGINE-COOLANT 48226147—>	.2
60	2174406-0	4	HOSE CLAMP 25-40/9	.2
80	2177867-0	2	HOSE, ENGINE COOLANT	.2
90	O913564-0	1	SCREW PLUG 1/2-14 NPTF —>48218999	.2
91	9000590-0	1	HEX.SOCK.SCR.PLUG WITH RUBBER SEAL M22x1,5 48219001—>	.2
100	2178607-1	1	HOSE CONNECTOR HEATER —>48218999	.2
112	2173621-1	1	THERMOSTAT WITH SEALING RING 80°C	.2
114	2178414-0	1	SEALING RING THERMOSTAT	..3
116	2178946-0	1	RETAINER THERMOSTAT	.2
120	2178339-0	1	GASKET THERMOSTAT COVER	.2
130	2178204-9	1	COVER, THERMOSTAT HOUSING (PAINTED)	.2
134	9000586-0	1	HEX.SOCK.SCR.PLUG WITH RUBBER SEAL M12x1,5	..3
140	3932008-0	4	SPRING WASHER DIN 137-B6-FST-A3C	.2
150	3862320-0	4	HEX.SOCK. HD.CAP SCR. DIN 912-M6x20-8.8-A2C	.2

STEYRMOTORS
INNOVATION WITH LIGHTNESS

84 MARINE TURBO DIESEL +SOLAS

WATERPUMP

05044084-0

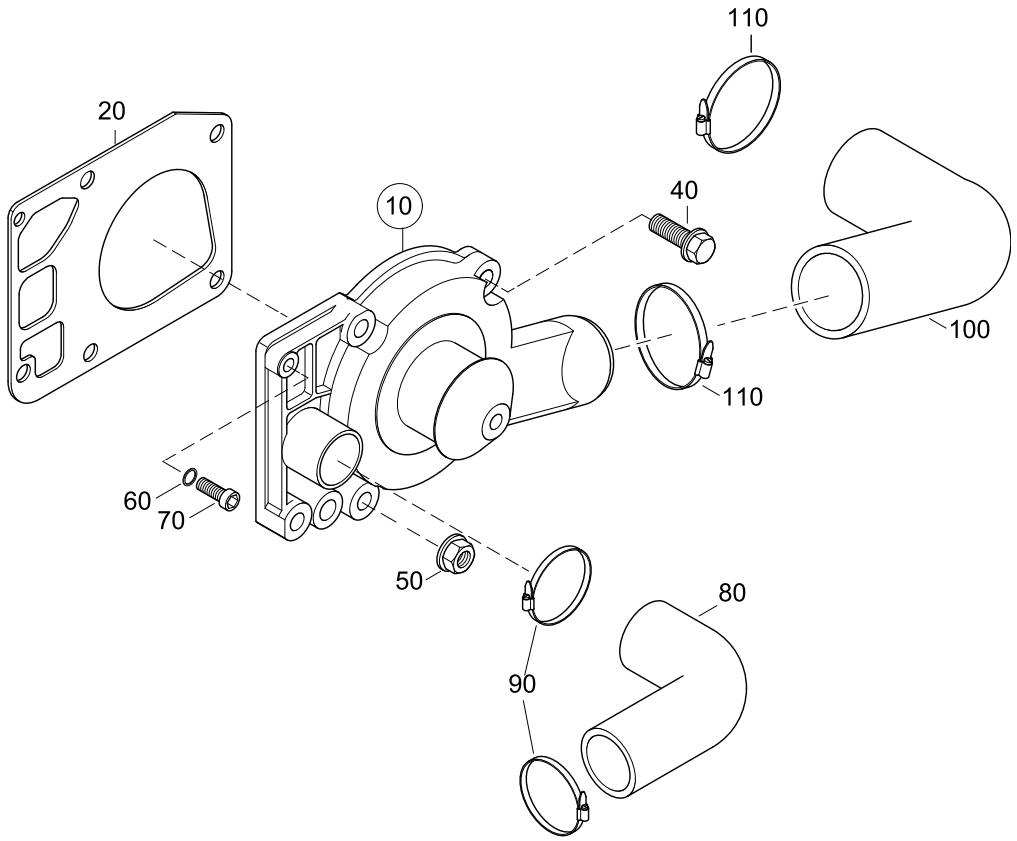

WATERPUMP

84 MARINE TURBO DIESEL +SOLAS

05044084-0

Pos.	Part.-No.	Qty	Designation	Step
10	Z002425-0	1	WATERPUMP ASSY. (PAINTED) INCL. GASKET	.2
20	2177329-2	1	GASKET WATERPUMP-HOUSING	..3
40	9000431-0	4	HEX.FLANGE BOLT EN 1665-M8x30-10.9-DAC	.2
50	9000056-1	1	HEX.FLANGE NUT DIN 6923-M8-8-A2C	.2
60	3932008-0	1	SPRING WASHER DIN 137-B6-FST-A3C	.2
70	3862327-0	1	HEX.SOCK. HD.CAP SCR. DIN 912-M6x25-8.8-A2C	.2
80	2178462-0	1	HOSE-ELBOW 32/90°x 88	.2
90	2174406-0	2	HOSE CLAMP 25-40/9	.2
100	2173812-0	1	HOSE-ELBOW	.2
110	2174407-0	2	HOSE CLAMP 40-60/9	.2

STEYRMOTORS
INNOVATION WITH LIGHTNESS

84 MARINE TURBO DIESEL +SOLAS

DRIVE BELTS, PULLEYS, TENSIONER

05054084-0

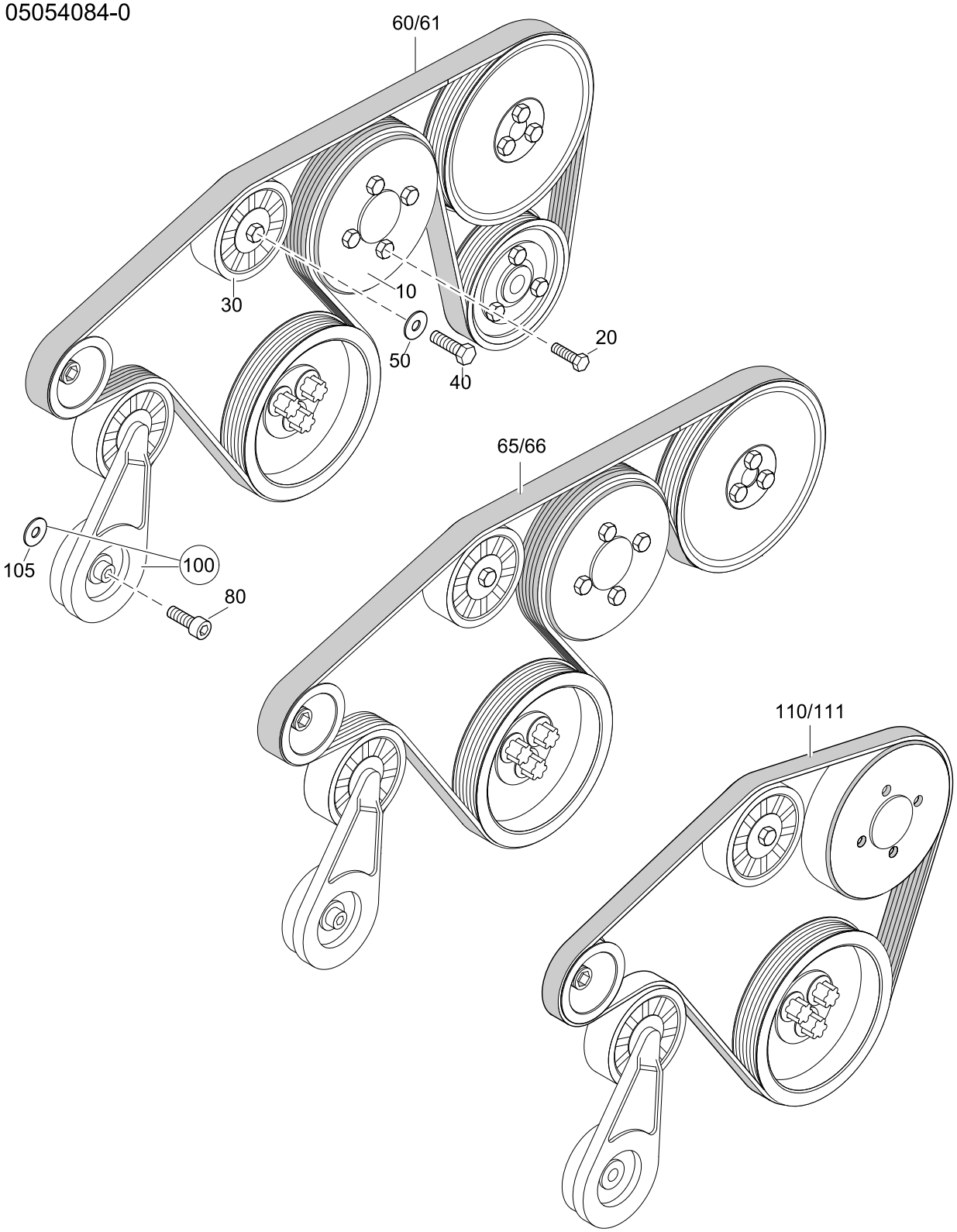

DRIVE BELTS, PULLEYS, TENSIONER

84 MARINE TURBO DIESEL +SOLAS

05054084-0

Pos.	Part.-No.	Qty	Designation	Step
10	2203562-1	1	PULLEY (KTL)	.2
20	9000287-0	4	HEX.FLANGE BOLT EN 1665-M6x12-8.8-A3C	.2
30	2203559-0	1	IDLER PULLEY ASSY.	.2
40	3802527-0	1	HEX.HD.SCR. ISO 4017-M10x30-A4	.2
50	3936107-0	1	WASHER LARGE SERIES ISO 7093-10,5-140HV-A4	.2
60	2203742-0	1	POLY-V BELT L=1855 —>482330249	.2
61	2205726-0	1	POLY-V BELT L=1845 482330250—>	.2
65	2203742-1	1	POLY-V BELT L=1675 —>482330249	.2
66	2204061-0	1	POLY-V BELT L=1660 482330250—>	.2
80	3862552-0	1	HEX.SOCK. HD.CAP SCR. ISO 4762-M10x60-8.8-A2C	.2
100	Z002421-0	1	SPARE P. TENSIONER POLY-V BELT	.2
105	9000438-0	1	SHIM RING DIN 988-10x16x0.3	..3
110	2205539-1	1	POLY-V BELT L=1005mm —>482330249	.2
111	2204062-0	1	POLY-V BELT L=985 482330250—>	.2

STEYRMOTORS
INNOVATION WITH LIGHTNESS

84 MARINE TURBO DIESEL +SOLAS

RAW WATER PUMP

05104084-0

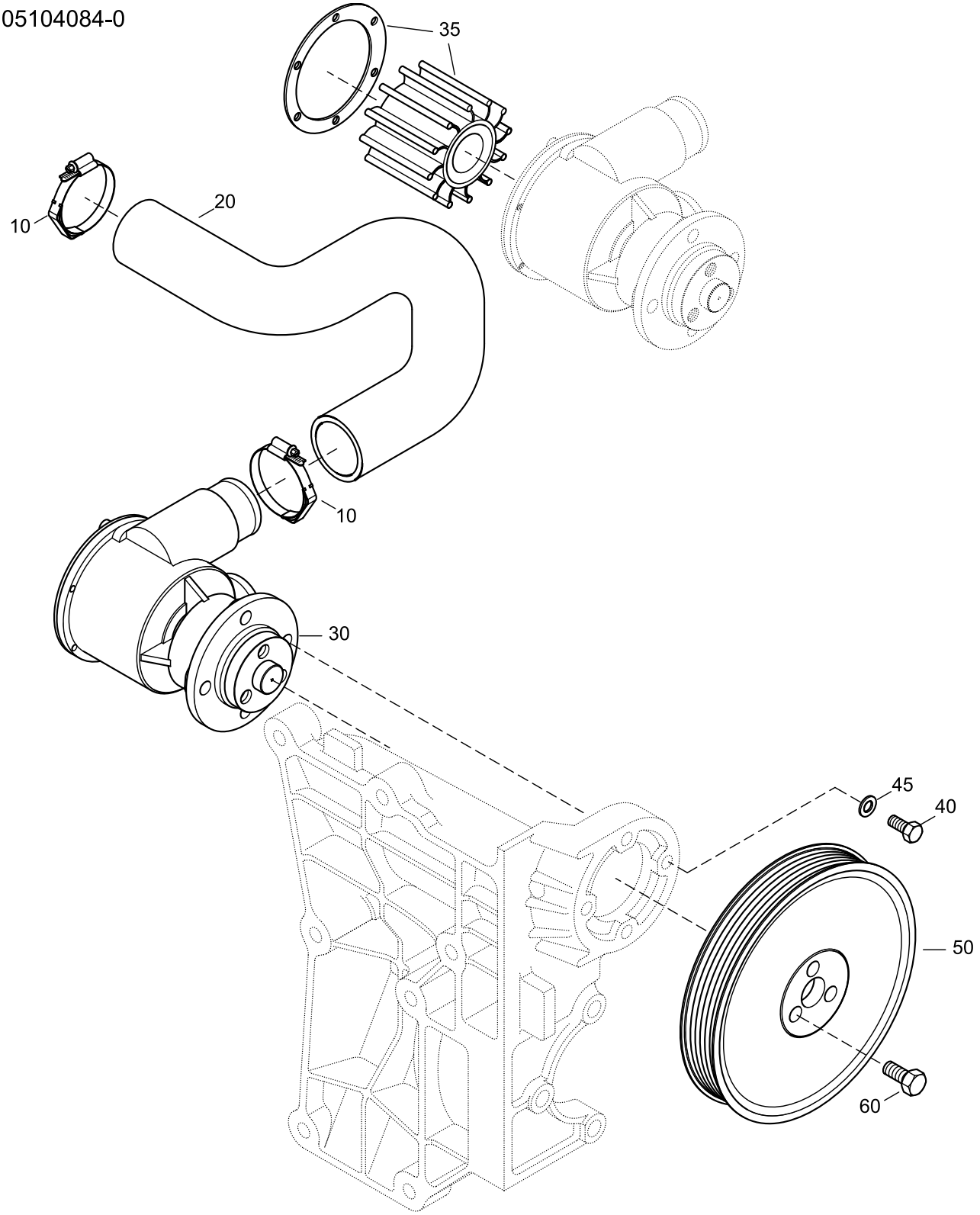

RAW WATER PUMP

84 MARINE TURBO DIESEL +SOLAS

05104084-0

Pos.	Part.-No.	Qty	Designation	Step
10	2179044-0	2	HOSE CLAMP WITH SPRING 25-40/9	.2
20	2203768-0	1	HOSE PUMP-TANDEM COOLER	.2
30	2203714-9	1	RAW WATER PUMP (PAINTED)	.2
35	Z011753-2	1	SERVICE KIT, RAW WATER PUMP (WITH GREASE)	.2
40	3800221-0	4	HEX.HD.SCR. ISO 4017-M6x20-A2-70	.2
45	3930070-0	4	WASHER DIN 125-6-140HV-A2	.2
50	2203746-0	1	PULLEY RAW WATER PUMP	.2
60	3860152-0	3	HEX.SOCK. HD.CAP SCR. DIN 912-M8x16-A2-70	.2

STEYRMOTORS
INNOVATION WITH LIGHTNESS

84 MARINE TURBO DIESEL +SOLAS

RAW WATER PIPES, FUEL-OIL COOLER

05124034-0

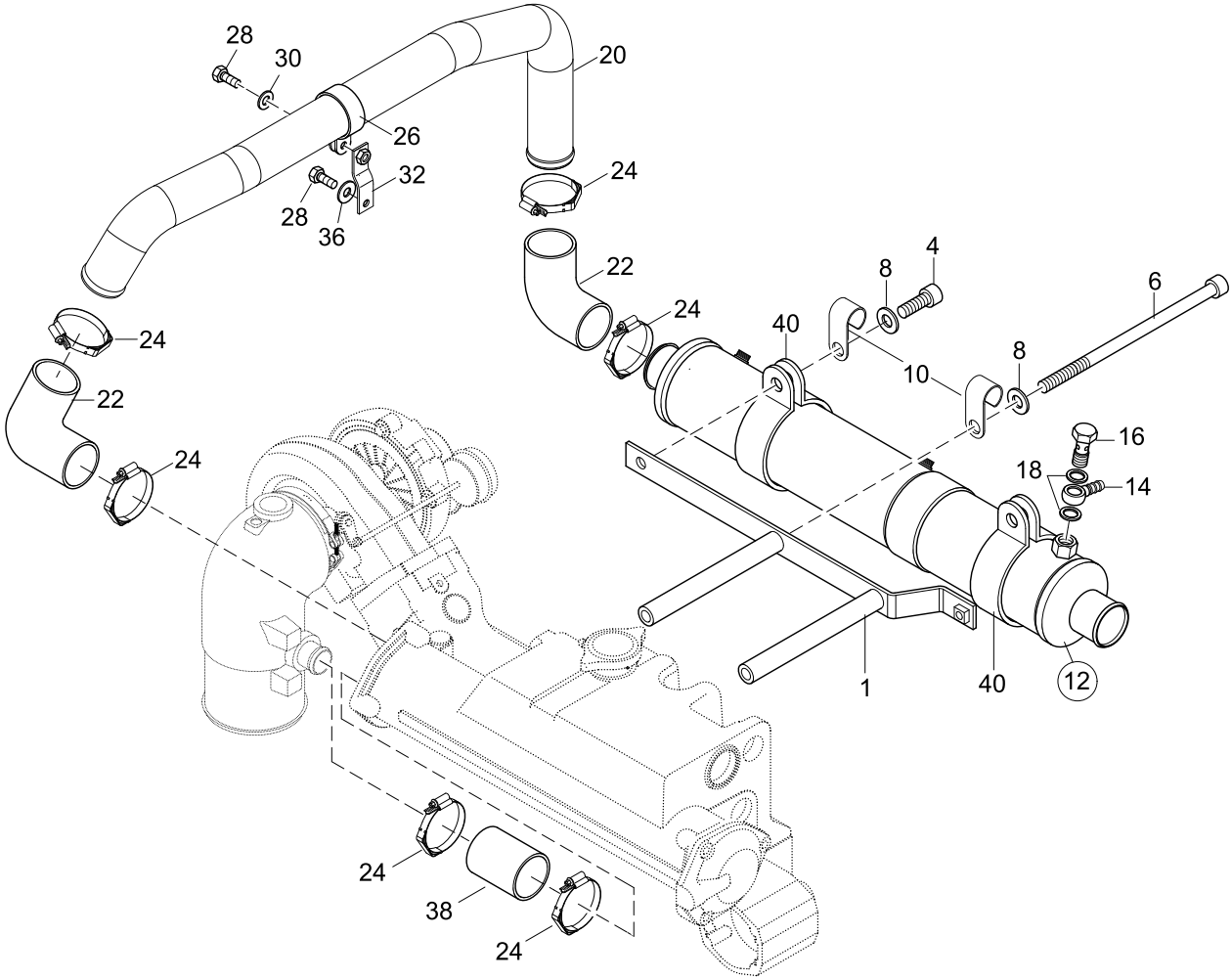

RAW WATER PIPES, FUEL-OIL COOLER

84 MARINE TURBO DIESEL +SOLAS

05124034-0

Pos.	Part.-No.	Qty	Designation	Step
1	2179030-1	1	BRACKET TANDEM-COOLER —>482309999	.2
4	9000063-0	1	HEX.SOCK. HD.CAP SCR. DIN 912-M8x20-A2-70	.2
6	9000444-0	2	HEX.SOCK. HD.CAP SCR. DIN 912-M8x180-8.8 DAC	.2
8	3930103-0	3	WASHER DIN 125-8.4-140HV-A2	.2
10	O310947-0	2	J-CLAMPS	.2
12	Z002097-0	1	TANDEM COOLER ASSY. (PAINTED)	.2
14	2174383-1	1	BANJO FITTING DN8 DIN 7642-A2C	..3
16	9000053-0	1	HOLLOW SCREW M14x1,5 DIN 7643-10-ZN/NI	..3
18	3098015-0	2	SEALING RING DIN 7603-A14x20-CU	..3
20	2203758-1	1	PIPE TANDEM COOLER-HEAT EXCHA.	.2
22	2173704-0	2	HOSE-ELBOW 32/90°x 58	.2
24	2179044-0	6	HOSE CLAMP WITH SPRING 25-40/9	.2
26	2178446-0	1	PIPE CLAMP RSGU1.32/15-W5	.2
28	3800233-0	1	HEX.HD.SCR. ISO 4017-M6x16-A2-70	.2
30	3930070-0	1	WASHER DIN 125-6-140HV-A2	.2
32	2177743-9	1	FISHPLATE OIL INTAKE PIPE PAINTED	.2
34	3802321-0	1	HEX.HD.SCR. ISO 4017-M6x16-8.8-A2C	.2
36	9000012-0	1	WASHER LARGE SERIES DIN 9021-6.4-140HV-A2	.2
38	2177760-0	1	COOLING-WATER HOSE	.2
40	2178385-0	2	PIPE CLAMP 54/20	.2

STEYRMOTORS
INNOVATION WITH LIGHTNESS

84 MARINE TURBO DIESEL +SOLAS

ALTERNATOR

06014084-0

TILL --> 482330249

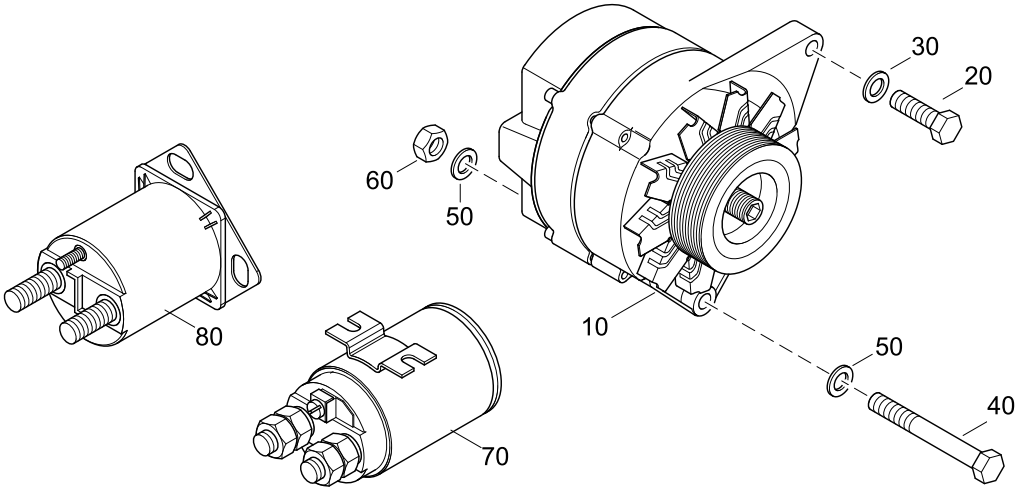

FROM 482330250 -->

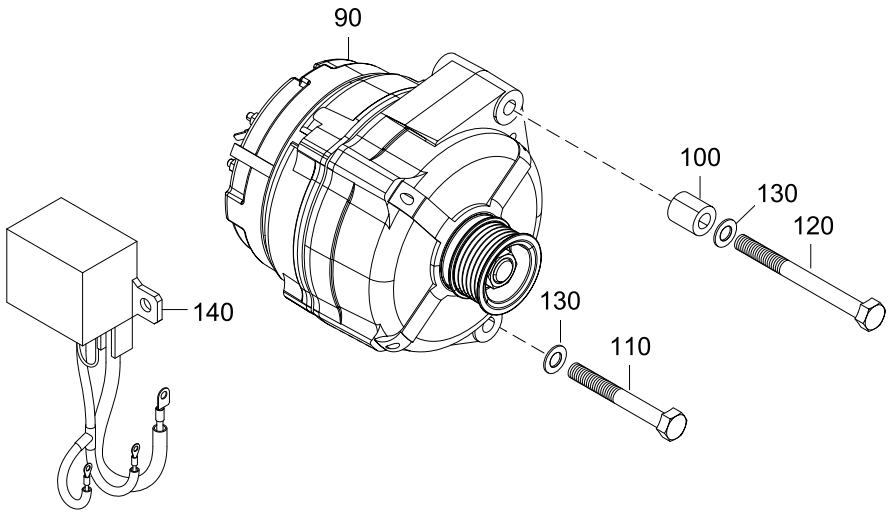

ALTERNATOR

84 MARINE TURBO DIESEL +SOLAS

06014084-0

Pos.	Part.-No.	Qty	Designation	Step
10	2203713-9	1	ALTERNATOR 14V-90A (PAINTED)	.2
20	3802437-0	1	HEX.HD.SCR. ISO 4017-M8x35-8.8-A2C	.2
30	3930103-0	1	WASHER ISO 7089-8.4-140HV-A2	.2
40	3800575-0	1	HEX.HD.BOLT ISO 4014-M10x130-8.8-A3C	.2
50	3930075-0	2	WASHER ISO 7089 A10.5-140HV-A2	.2
60	3870030-0	1	HEX.NUT ISO 4032-M10-A2-70	.2
70	9000457-0	1	RELAY 12V-150A	.2
80	2206161-0	1	POWER SOLENOID 12V	.2
90	Z026127-0	1	ALTERNATOR ASSY. 14V-120A (PAINTED)	.2
100	2180116-0	1	SLIDING COLLAR	.2
110	3800571-0	1	HEX.HD.BOLT ISO 4014-M10x80-8.8-A3C	.2
120	3800568-0	1	HEX.HD.BOLT ISO 4014-M10x100-8.8-A3C	.2
130	3930271-0	2	WASHER ISO 7089-10-140HV-A3C	.2
140	2204057-0	1	CABLE LOOM 2-POLE	.2

STEYRMOTORS
INNOVATION WITH LIGHTNESS

84 MARINE TURBO DIESEL +SOLAS

STARTING

06034084-0

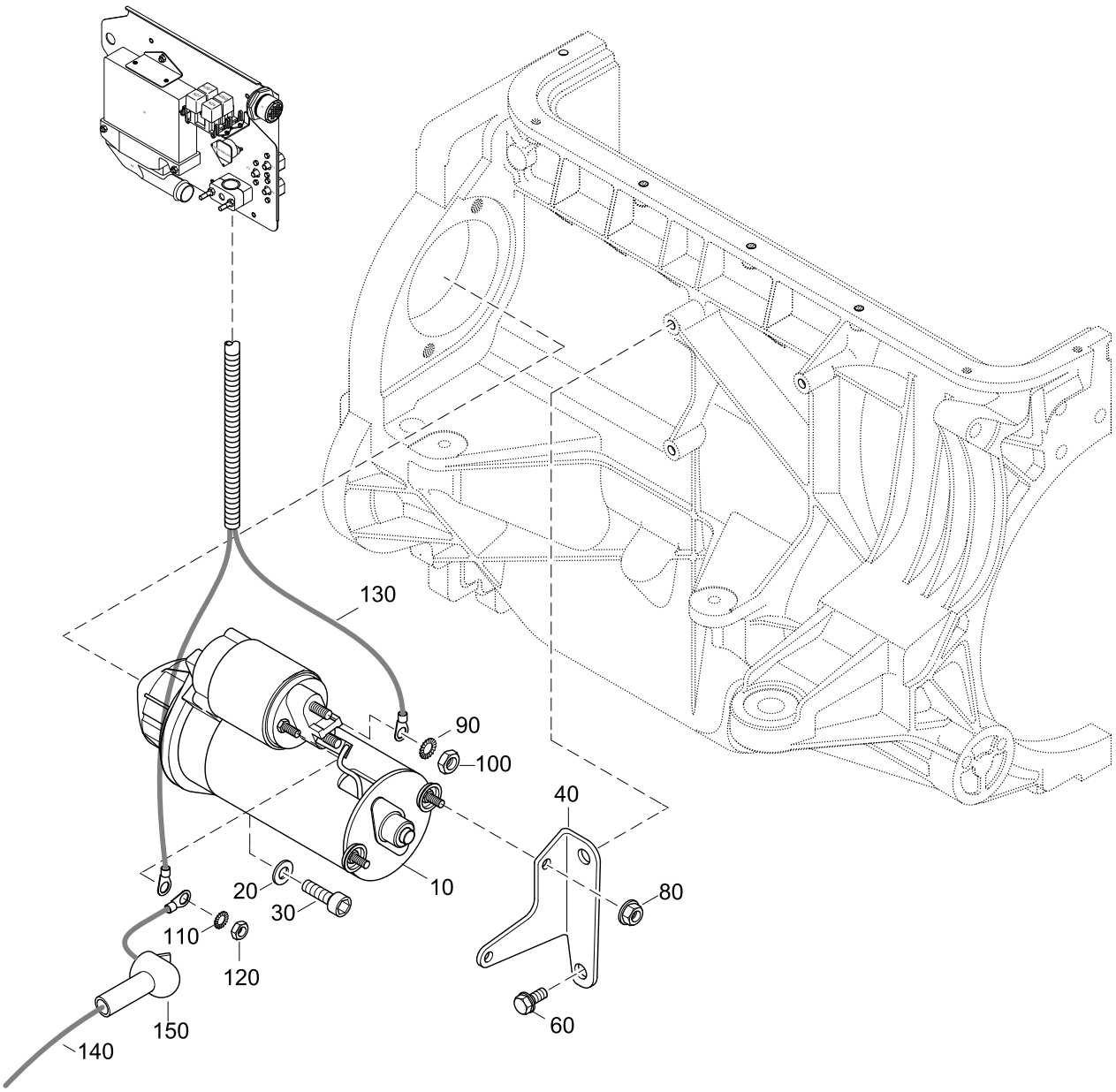

STARTING

84 MARINE TURBO DIESEL +SOLAS

06034084-0

Pos.	Part.-No.	Qty	Designation	Step
10	2040077-8	1	STARTER 12V (PAINTED)	.2
20	3932025-0	2	SPRING WASHER DIN 137-A10-FST-A3C	.2
30	3860149-0	2	HEX.SOCK. HD.CAP SCR. DIN 912-M10x40-8.8-A3C	.2
40	2203730-0	1	BRACKET STARTER	.2
60	9000305-0	2	HEX.FLANGE BOLT EN 1665-M8x20-10.9-DAC	.2
80	3880049-0	2	HEX.FLANGE NUT DIN 6923-M6-A2-70	.2
90	9000013-0	2	TOOTHED LOCK WASHER EXTERNAL DIN 6797-A8.4-1.4310	.2
100	3870045-0	1	HEX.NUT ISO 4032-M8-A2-70	.2
110	9000040-0	1	TOOTHED LOCK WASHER EXTERN. DIN 6797-A5.3-1.4310	.2
120	3870050-0	1	HEX.NUT DIN 934-M5-A2-70	.2
130	Z002167-0	1	HARNESS STARTER (SPARE)	.2
140	2206213-0	1	BATTERY CABLE RED	.2
150	O910111-0	1	RUBBER PROTECTION CAP	.2

STEYRMOTORS
INNOVATION WITH LIGHTNESS

84 MARINE TURBO DIESEL + SOLAS

ENGINE HARNESS
48221067 --> 48226999

06054084-1

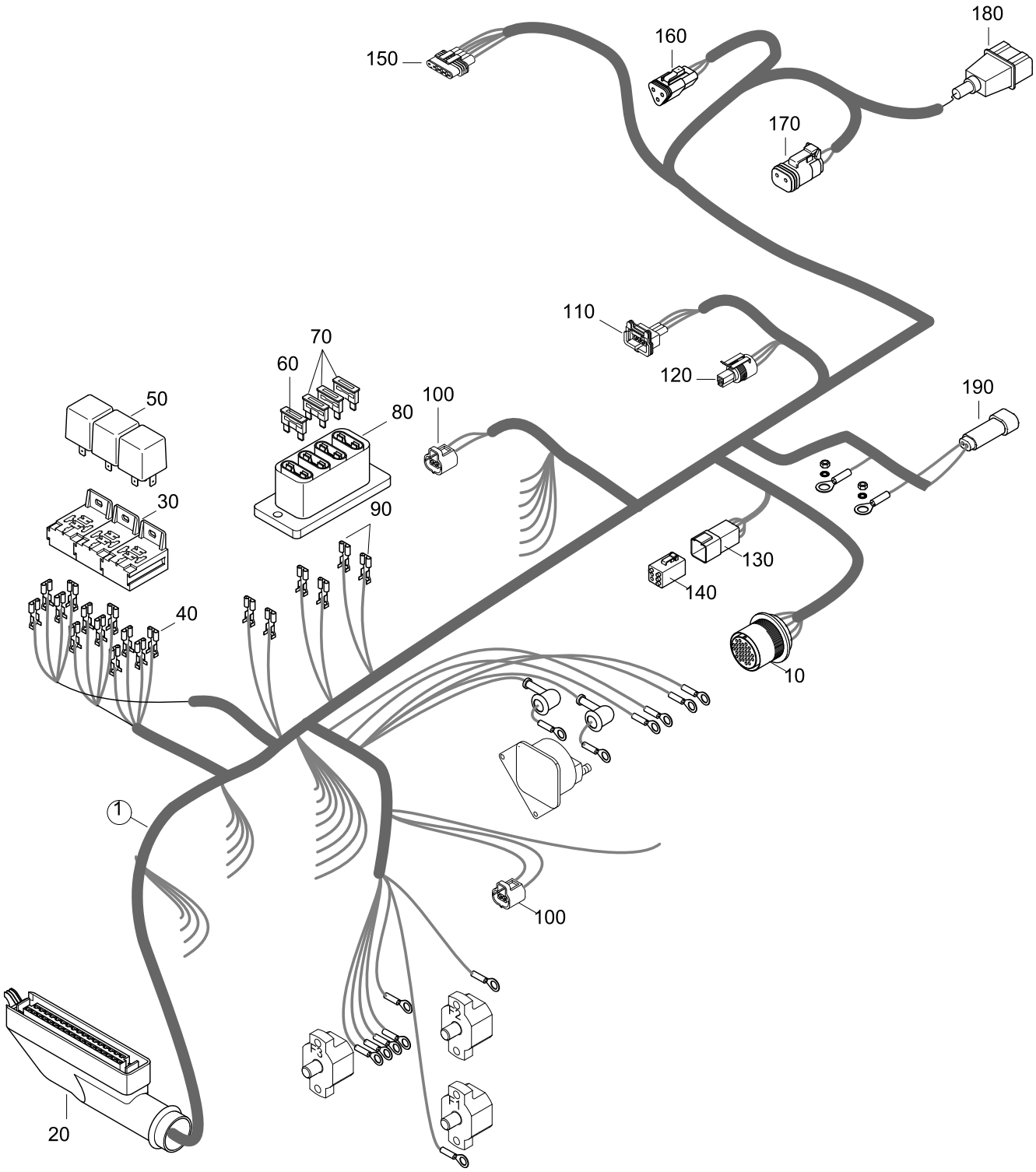

ENGINE HARNESS
48221067 --> 48226999

84 MARINE TURBO DIESEL +SOLAS

06054084-1

Pos.	Part.-No.	Qty	Designation	Step
1	2206207-2	1	ENGINE HARNESS	.2
10	Z002410-0	1	CABLE-PLUG PAIR COMPL. 23-POLE	..3
20	Z002411-0	1	RECEPTACLE COMPL. ECU	..3
30	9000421-0	3	RELAY SOCKET	..3
40	3499650-0	19	RECEPTACLE 6,3-2,5	..3
50	9000183-0	3	RELAY 12V 40A	..3
60	12156	1	FUSE 5A, LIGHTBRAUN	..3
70	11345	3	FUSE 10A, RED	..3
80	2206152-0	1	FUSE CARRIER 4 WAY	..3
90	9000125-0	6	BLADE TERMINAL 6,3x2,5 / 1,5-2,5	..3
100	Z002046-1	2	CONNECTOR COOLANT TEMP. SENSOR	..3
110	Z002412-0	1	PLUG COMPL. REVOLUTION SENSOR	..3
120	Z002413-0	1	CONNECTOR OIL PRESSURE SENSOR	..3
130	Z002415-0	1	PLUG COMPL. DIAGNOSTIC 6 WAY	..3
140	2178729-3	1	DIAGNOSTIC PLUG 6-WAY	..3
150	Z002414-0	1	CONNECTOR POTENTI. ACCELERATOR	..3
160	Z002416-0	1	PLUG POT. CONTROL ROD POSITION 3-POLE	..3
170	Z002417-0	1	PLUG COMPL. CONTROL SOLENOID 2-POLE	..3
180	Z002418-0	1	PLUG ASSY BOOST PRESSURE SENSO R 3-POLE	..3
190	Z002419-0	1	PLUG COMPL. GEAR SWITCH 2 WAY	..3

STEYRMOTORS
INNOVATION WITH LIGHTNESS

84 MARINE TURBO DIESEL + SOLAS

ENGINE HARNESS
48227001 -->

06054084-2

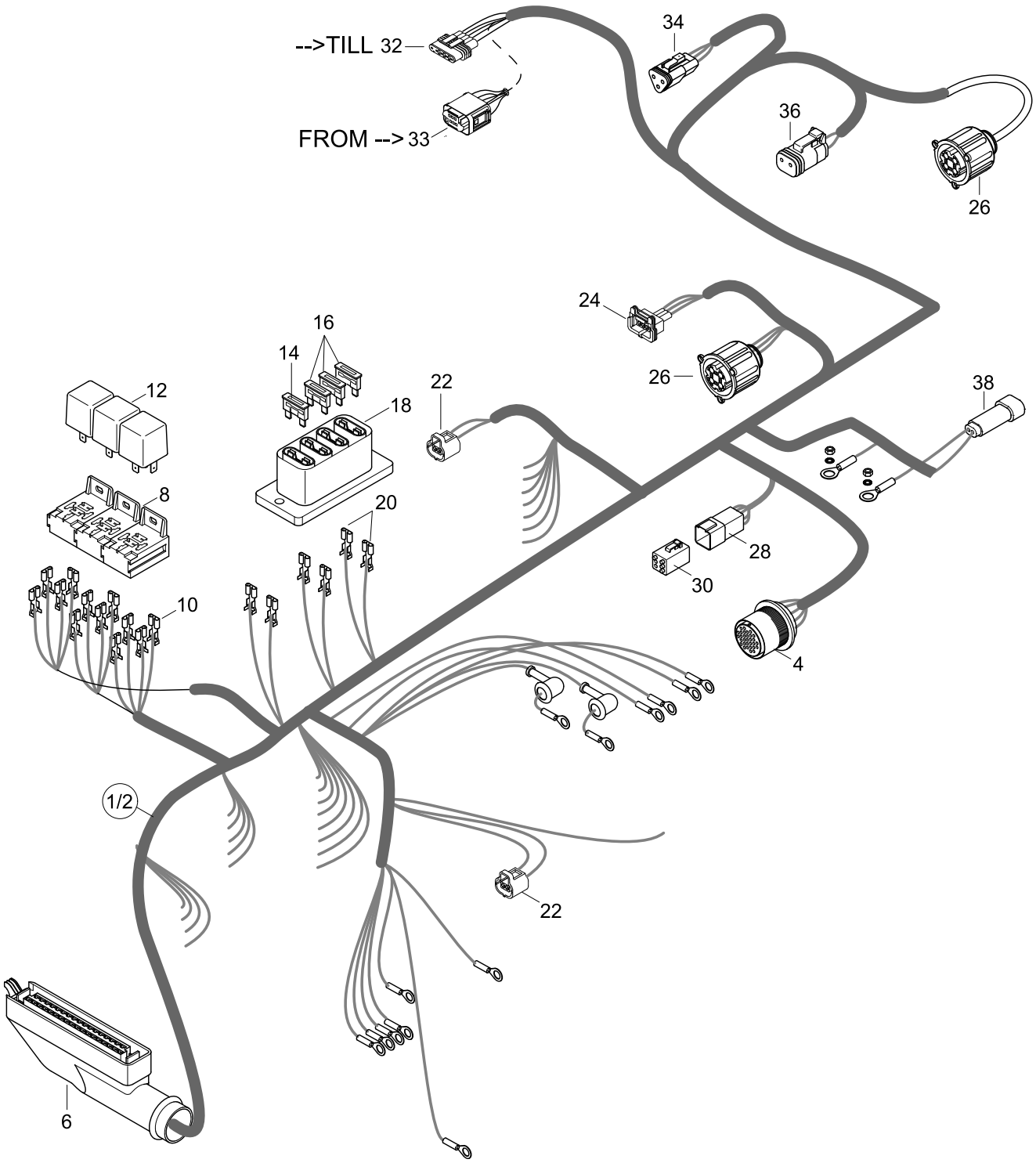

ENGINE HARNESS
48227001 -->

84 MARINE TURBO DIESEL +SOLAS

06054084-2

Pos.	Part.-No.	Qty	Designation	Step
1	Z002143-0	1	ENGINE HARNESS ASSY. 12V 482270001 —> 482330249	.2
2	Z024016-0	1	ENGINE HARNESS ASSY. 12V 482330250—>	.2
4	Z002410-0	1	CABLE-PLUG PAIR COMPL. 23-POLE	..3
6	Z002411-0	1	CABLE PLUG COMPL. 35-POLE	..3
8	9000421-0	3	RELAY SOCKET	..3
10	3499650-0	19	RECEPTACLE 6,3-2,5	..3
12	9000183-0	3	RELAY 12V 40A	..3
14	12156	1	FUSE 5A, LIGHTBRAUN	..3
16	11345	3	FUSE 10A, RED	..3
18	2206152-0	1	FUSE CARRIER 4 WAY	..3
20	9000125-0	6	BLADE TERMINAL 6,3x2,5 / 1,5-2,5	..3
22	Z002046-1	2	CABLE PLUG COMPL. 2-POLE	..3
24	Z002412-0	1	PLUG COMPLETE 3-POLE	..3
26	Z002139-0	2	PLUG COMPLETE 3-POLE	..3
28	Z002415-0	1	PLUG COMPLETE 6-POLE	..3
30	2178729-3	1	DIAGNOSTIC PLUG 6-WAY	..3
32	Z002414-0	1	PLUG COMPLETE 5-POLE 482270001—>482330249	..3
33	Z002414-2	1	PLUG COMPLETE 6-POLE 482330250—>	..3
34	Z002416-0	1	PLUG COMPLETE 3-POLE	..3
36	Z002417-0	1	PLUG COMPLETE 2-POLE	..3
38	Z002419-0	1	PLUG COMPL. GEAR SWITCH 2 WAY	..3

STEYRMOTORS
INNOVATION WITH LIGHTNESS

84 MARINE TURBO DIESEL +SOLAS

SECURETYSYSTEM, FUSES, ECU, E-BOX

06064034-5

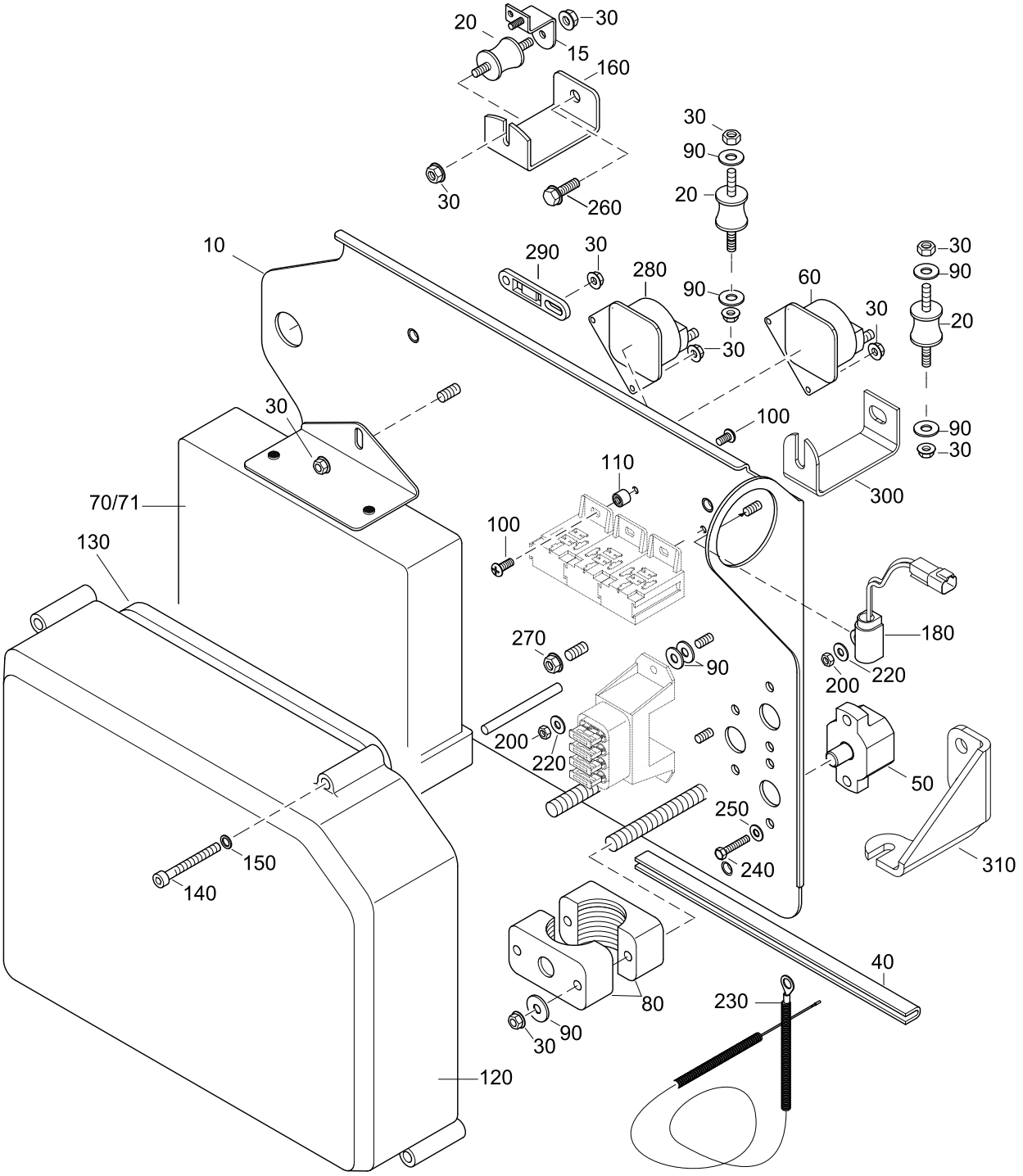

SECURETYSYSTEM, FUSES, ECU, E-BOX

84 MARINE TURBO DIESEL +SOLAS

06064034-5

Pos.	Part.-No.	Qty	Designation	Step
10	2203723-1	1	BASE PLATE —>482330249	.2
11	2204051-0	1	BASE PLATE 482330250—>	.2
15	2203723-B	1	BRACKET BASEPLATE	..3
20	2203744-0	4	RUBBER MOUNT	.2
30	3880049-0	13	HEX.FLANGE NUT EN 1661-M6-A2-70	.2
40	2173329-0	0.2	EDGE PROTECTOR	.2
50	O913774-0	3	AUTOMATIC CIRCUIT BREAKER 50A	.2
60	9000187-0	1	SOLENOID STARTER	.2
70	2176844-5	1	ECU 84 55kW - 3200rpm —>482330249	.2
71	2176844-L	1	ECU 84 55kW - 3200rpm 482330250—>	.2
80	2203753-0	2	CLAMP, FASTEN ENGINE-HARNESS	.2
90	9000012-0	10	WASHER LARGE SERIES ISO 7093-6.4-140HV-A2	.2
100	9000215-1	4	CROSS RECESS PAN HD.SCR. ISO 7045-M5x6-A2-50-H	.2
110	2179004-0	2	SILENT BLOCK M5	.2
120	2203720-0	1	COVERING, ENGINE ELECTRIC	.2
130	2171410-1	1	SEAL, COVERING ENGINE ELECTRIC	.2
140	9000003-0	5	HEX.SOCK. HD.CAP SCR. ISO 4762-M5x55-A2-70	.2
150	3930069-0	5	WASHER ISO 7089-5-200HV-A2	.2
160	2203724-0	2	SUPPORT BASE PLATE	.2
180	2178971-G	1	INVERSION-SWITCH ASSY	.2
200	3870050-0	3	HEX.NUT ISO 4032-M5-A2-70	.2
220	3930069-0	3	WASHER ISO 7089-5-200HV-A2	.2
230	2178975-0	1	CABLE INVERSION-SWITCH SOLAS	.2
240	9000424-0	6	HEX.HD.SCR. ISO 4017-8/32UNCx20-A2-70	.2
250	3930072-0	6	WASHER LARGE SERIES ISO 7093-4.3-A2	.2
260	9000305-0	2	HEX.FLANGE BOLT EN 1665-M8x20-10.9-DAC	.2
270	3880049-0	1	HEX.FLANGE NUT EN 1661-M6-A2-70	.2
280	2206161-0	1	POWER SOLENOID 12V	.2
290	2178870-0	1	FIXTURE, CABLE TIE	.2
300	2204060-0	1	SUPPORT BASE PLATE 482330250—>	.2
310	2204052-0	1	BRACKET, E-BOX 482330250—>	.2

STEYRMOTORS
INNOVATION WITH LIGHTNESS

84 MARINE TURBO DIESEL +SOLAS

INSTRUMENTPANEL (STANDARD) TILL -->2010

06084084-0

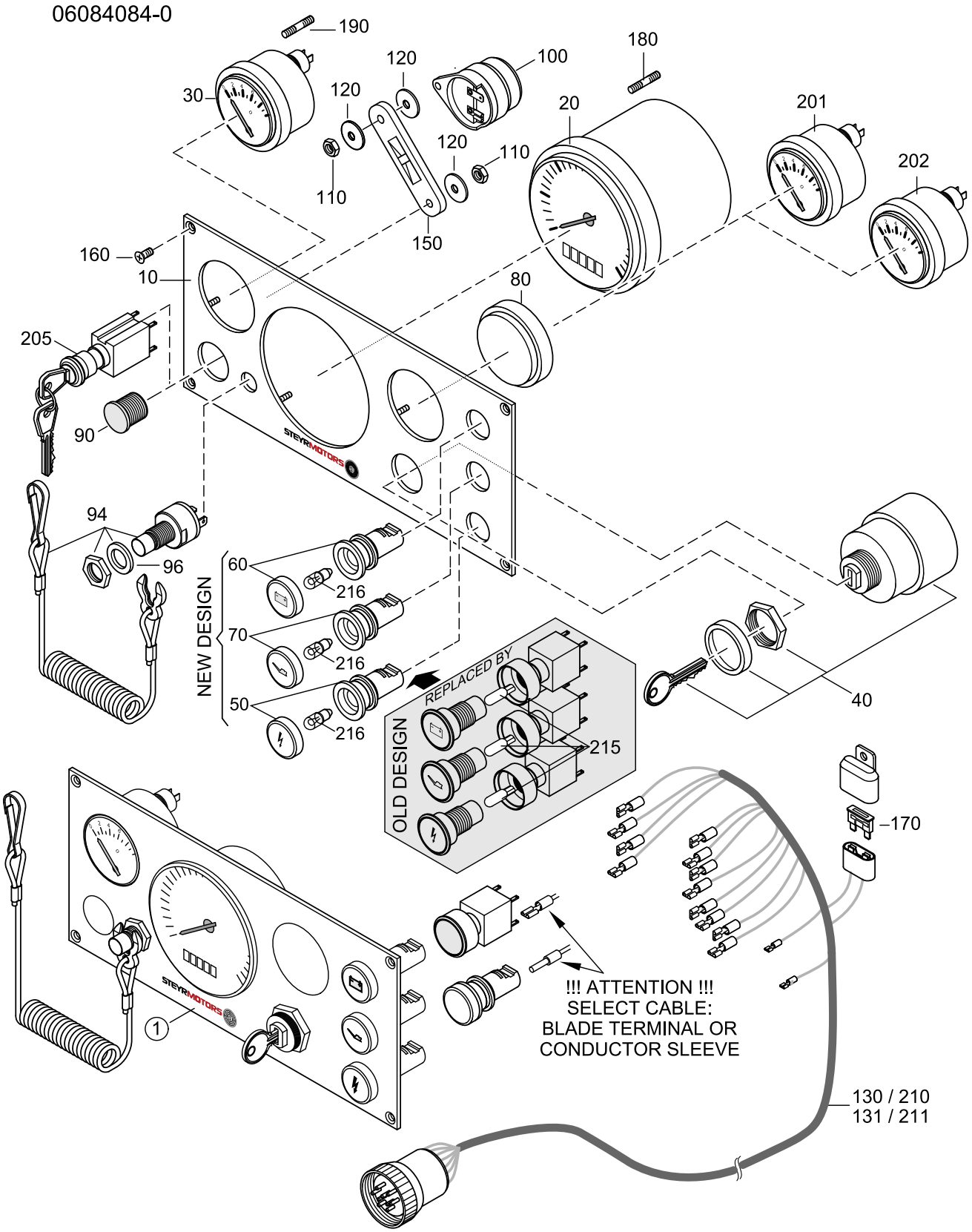

INSTRUMENTPANEL (STANDARD)
TILL -->2010

84 MARINE TURBO DIESEL +SOLAS

06084084-0

Pos.	Part.-No.	Qty	Designation	Step
1	Z002635-0	1	SPARE PANEL ASSY. (ALTERN. ISKRA)	.2
10	2178831-3	1	INSTRUMENT PANEL	..3
20	2178756-3	1	REVOLU. & OPERA. HOUR COUNTER	..3
30	2178229-2	1	COOLANT TEMPERATURE GAUGE	..3
40	2178761-4	1	GLOW-START SWITCH ASSY.(SPARE)	..3
50	2179290-0	1	WARNING-LIGHT CHECK ENGI. ASSY	..3
60	2179291-0	1	WARNING-LIGHT BATTERY CHARGE ASSY. 12V	..3
70	2179292-0	1	WARNING-LIGHT ENGINE-OIL ASSY.	..3
80	2178759-2	1	BLIND COVER	..3
90	2179320-0	1	BLIND PLUG, BLACK	..3
94	Z002073-0	1	EMERGENCY CUTOFF SWITCH KIT	..3
96	2176170-0	1	O-RING 15 x 2	..3
100	2178760-1	1	HORN AUDIBLE WARNING	..3
110	3870051-0	2	HEX.NUT ISO 4032-M4-A2-70	..3
120	3930072-0	2	WASHER LARGE SERIES DIN 9021-4.3-A2	..3
130	2206290-1	1	CABLE ASSY. INSTRUMENT 7m (BLADE TERMINAL)	..3
131	Z002669-0	1	CABLE ASSY. INSTRUMENT 7m (CONDUCTOR SLEEVE) SPARE PART	..3
160	9000192-0	4	CR.REC.COUNT.SUNK HD.TPG.SCR. ISO 7050-ST3.5x16	..3
170	11345	1	FUSE 10A, RED	..3
190	2206167-1	1	STUD	..3
201	2178227-2	1	OIL PRESSURE GAUGE 10 BAR (ACCESSORY)	.2
202	2178231-1	1	VOLTMETER 12V (ACCESSORY)	.2
205	2178761-2	1	KEY-SWITCH CONSTANT REVOLUTION (ACCESSORY)	.2
210	2206290-4	1	CABLE ASSY. INSTRUMENT 1,5m (BLADE TERMINAL)	.2
211	Z002670-0	1	CABLE ASSY. INSTRUMENT 1.5m (CONDUCTOR SLEEVE) SPARE PART	.2
215	2178242-4	3	GLASS SOCKET LAMP 12V 2W x 4,6D (OLD DESIGN)	.2
216	2179162-0	3	MINIATUR LAMP 12V/2W 10x28 (NEW DESIGN)	.2

STEYRMOTORS
INNOVATION WITH LIGHTNESS

84 MARINE TURBO DIESEL +SOLAS

INSTRUMENTPANEL (STANDARD) FROM 2010-->

06072184-1

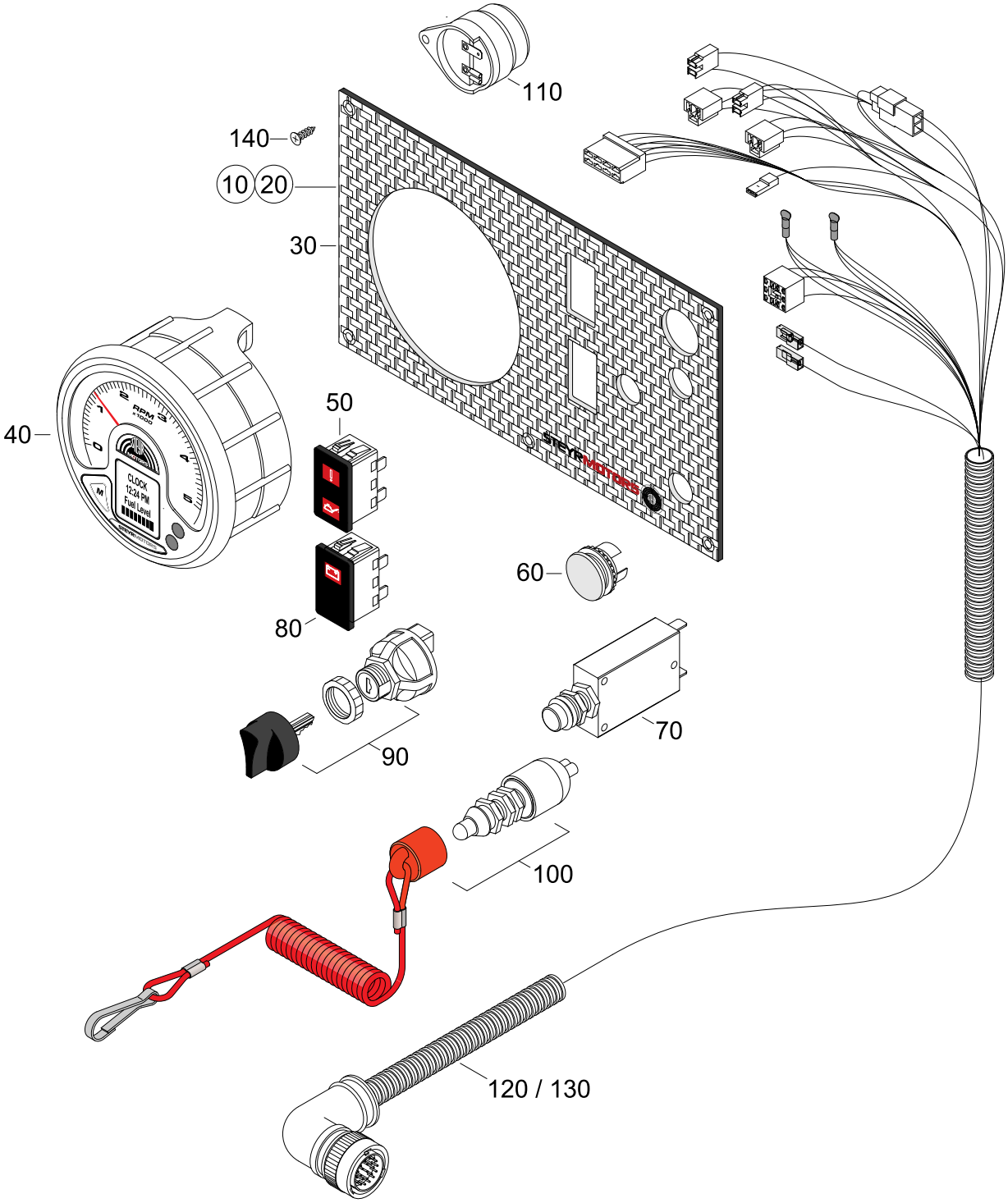

INSTRUMENTPANEL (STANDARD)
FROM 2010-->

84 MARINE TURBO DIESEL +SOLAS

06072184-1

Pos.	Part.-No.	Qty	Designation	Step
10	2179963-0	1	INSTR. PANEL ASSY. (LED) 12V 7m	.2
20	2179965-0	1	INSTR.PANEL ASSY. (LED) 12V 1,5m	.2
30	2179981-0	1	FRONT PLATE, INSTRUMENT PANEL - STANDARD	..3
40	2179971-0	1	REVOLUTION COUNTER	..3
50	Z002196-0	1	WARNING LED, CHECK ENGINE & OIL PRESSURE	..3
60	2179320-0	1	BLIND PLUG, BLACK	..3
70	Z002180-0	1	THERMO PROTECTION SWITCH ASSY.	..3
80	Z002197-0	1	WARNING LED, BATTERY CHARGE	..3
90	2179975-0	1	GLOW-START SWITCH	..3
100	2179978-0	1	EMERGENCY CUTOFF SWITCH	..3
110	2178760-1	1	HORN AUDIBLE WARNING	..3
120	2180073-0	1	CABLE ASSY. INSTRUMENT 7m	..3
130	2180075-0	1	CABLE ASSY. INSTRUMENT 1,5m	..3
140	9000817-0	6	CR.REC.COUNT.SUNK HD.TPG.SCR. 3.5x16	..3

STEYRMOTORS
INNOVATION WITH LIGHTNESS

84 MARINE TURBO DIESEL +SOLAS

INSTRUMENTPANEL SOLAS (STANDARD) TILL -->2010

06094084-0

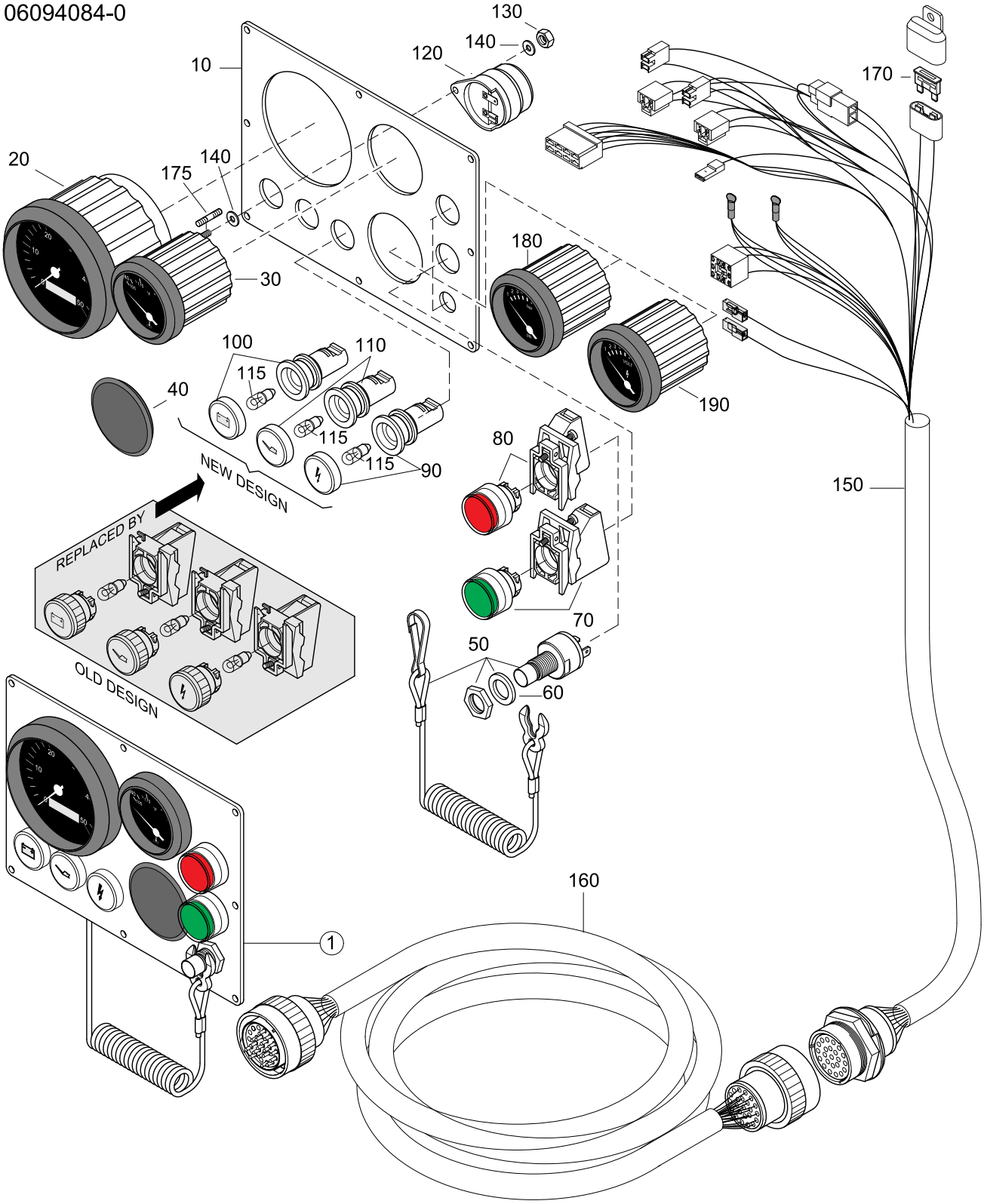

INSTRUMENTPANEL SOLAS (STANDARD)
TILL -->2010

84 MARINE TURBO DIESEL +SOLAS

06094084-0

Pos.	Part.-No.	Qty	Designation	Step
1	Z002122-0	1	SPARE PANEL ASSY. SOLAS (ALTERN. ISKRA)	.2
10	2178831-4	1	INSTRUMENT PANEL SOLAS	..3
20	2178756-3	1	REVOLU. & OPERA. HOUR COUNTER	..3
30	2178229-2	1	COOLANT TEMPERATURE GAUGE	..3
40	2178759-2	1	BLIND COVER	..3
50	Z002073-0	1	EMERGENCY CUTOFF SWITCH KIT	..3
60	2176170-0	1	O-RING 15 x 2	..3
70	2179294-0	1	SWITCH ASSY. START GREEN	..3
80	2179293-5	1	IGNITION SWITCH RED ASSY.	..3
90	2179290-0	1	WARNING-LIGHT CHECK ENGI. ASSY	..3
100	2179291-0	1	WARNING-LIGHT BATTERY CHARGE ASSY. 12V	..3
110	2179292-0	1	WARNING-LIGHT ENGINE-OIL ASSY.	..3
115	2179262-0	3	INVERTER/CHARGER 2500W/12VDC 130A/220V/50Hz	..3
120	2178760-1	1	HORN AUDIBLE WARNING	..3
130	3870051-0	2	HEX.NUT ISO 4032-M4-A2-70	..3
140	3930072-0	2	WASHER LARGE SERIES DIN 9021-4.3-A2	..3
150	Z002671-0	1	CABLE ASSY. INSTR. 1.5m SOLAS (SPARE PART)	..3
160	2206291-1	1	INTERMEDIATE CABLE 5m SAME 23-WAY CON.	..3
170	11345	1	FUSE 10A, RED	..3
175	2206167-1	1	STUD	..3
180	2178227-2	1	OIL PRESSURE GAUGE 10 BAR (ACCESSORY)	.2
190	2178231-1	1	VOLTMETER 12V (ACCESSORY)	.2

STEYRMOTORS
INNOVATION WITH LIGHTNESS

84 MARINE TURBO DIESEL +SOLAS	INSTRUMENTPANEL SOLAS (STANDARD) FROM 2010-->

06092184-1

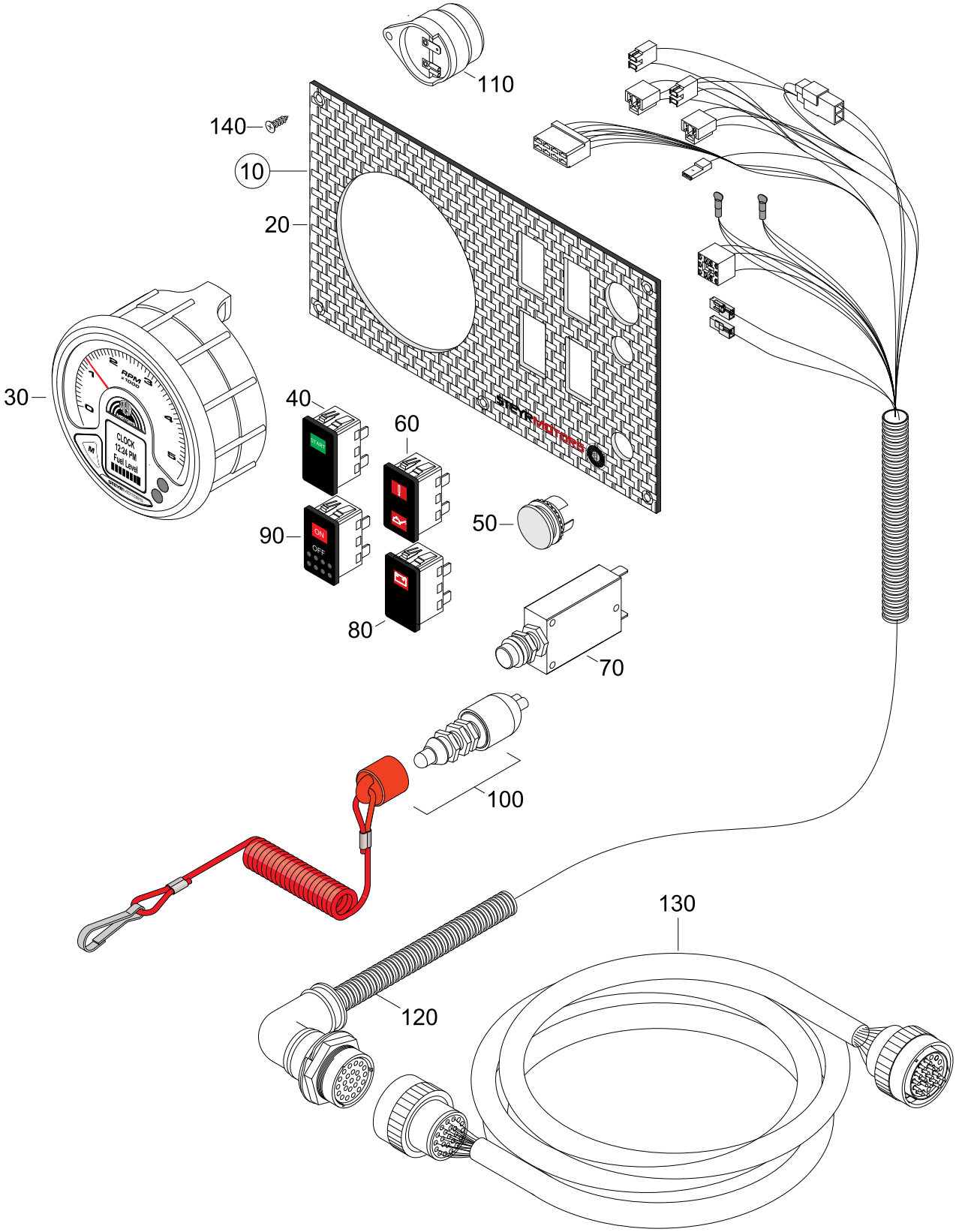

INSTRUMENTPANEL SOLAS (STANDARD) FROM 2010-->

84 MARINE TURBO DIESEL +SOLAS

06092184-1

Pos.	Part.-No.	Qty	Designation	Step
10	2179964-0	1	INSTRUMENT PANEL ASSY. (LED) 12V SOLAS	.2
20	2179982-0	1	FRONT PLATE, INSTRUMENT PANEL - SOLAS	..3
30	2179971-0	1	REVOLUTION COUNTER	..3
40	Z002198-0	1	START SWITCH, GREEN	..3
50	2179320-0	1	BLIND PLUG, BLACK	..3
60	Z002196-0	1	WARNING LED, CHECK ENGINE & OIL PRESSURE	..3
70	Z002180-0	1	THERMO PROTECTION SWITCH ASSY.	..3
80	Z002197-0	1	WARNING LED, BATTERY CHARGE	..3
90	Z002199-0	1	IGNITION SWITCH	..3
100	2179978-0	1	EMERGENCY CUTOFF SWITCH	..3
110	2178760-1	1	HORN AUDIBLE WARNING	..3
120	2180074-0	1	CABLE ASSY. INSTRUMENT	..3
130	2206291-1	1	INTERMEDIATE CABLE 5m	..3
140	9000817-0	6	CR.REC.COUNT.SUNK HD.TPG.SCR. 3.5x16	..3

STEYRMOTORS
INNOVATION WITH LIGHTNESS

84 MARINE TURBO DIESEL +SOLAS

DISPLAY (ACCESSORY)

06106184-2

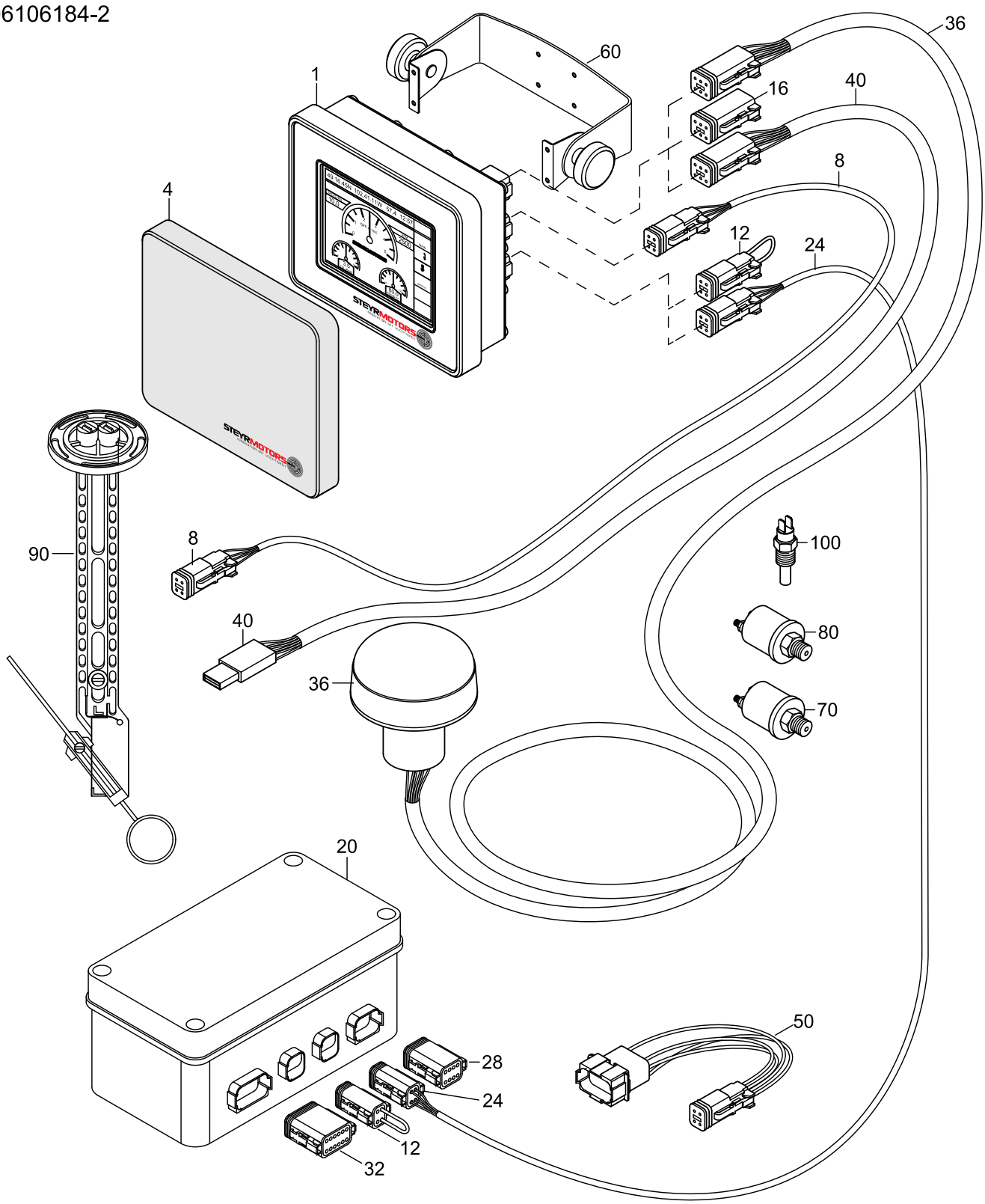

DISPLAY (ACCESSORY)

84 MARINE TURBO DIESEL +SOLAS

06106184-2

Pos.	Part.-No.	Qty	Designation	Step
1	Z002132-0	1	STEYR CONTROL CENTER (SPARE PART)	.2
4	2179637-0	1	PROTECTIVE COVERING - SCC	..3
8	2206313-0	1	CONNECTING CABLE SCC->PANEL (4-POLE)	..3
12	2206314-0	1	CONNECTOR CAN-TERMINATOR (4-POLE)	..3
16	2179638-0	1	DUMMY PLUG 6-POLE	..3
20	2179156-2	1	I/O BOX	.2
24	2206315-0	1	CONNECTING CABLE I/O BOX -> SCC (4-POLE)	..3
28	2179639-0	1	DUMMY PLUG 8-POLE	..3
32	2179640-0	1	DUMMY PLUG 12-POLE	..3
36	2179641-0	1	GPS-SENSOR ASSY	.2
40	2179607-0	1	SCC CONFIGURATIONS CABLE 1,8m USB 2.0	.2
50	2179636-0	1	ADAPTER CABLE SPORTLINE TO SCC (8-POLE TO 4-POLE)	.2
60	Z002177-0	1	KIT MOUNTING BRACHETS F. SCC	.2
70	Z002640-0	1	OIL PRESSURE SENSOR 2-POLE (ACCESSORY)	.2
80	2179519-0	1	OIL PRESSURE SENSOR ZF-GEARBOX	.2
90	2179331-0	1	FUEL TANK SENSOR	.2
100	2179520-0	1	TEMPERATURE SENSOR, GEARBOX OIL	.2

STEYRMOTORS
INNOVATION WITH LIGHTNESS

84 MARINE TURBO DIESEL + SOLAS

SWITCH PANEL FOR DISPLAY TILL -->2010

06114084-0

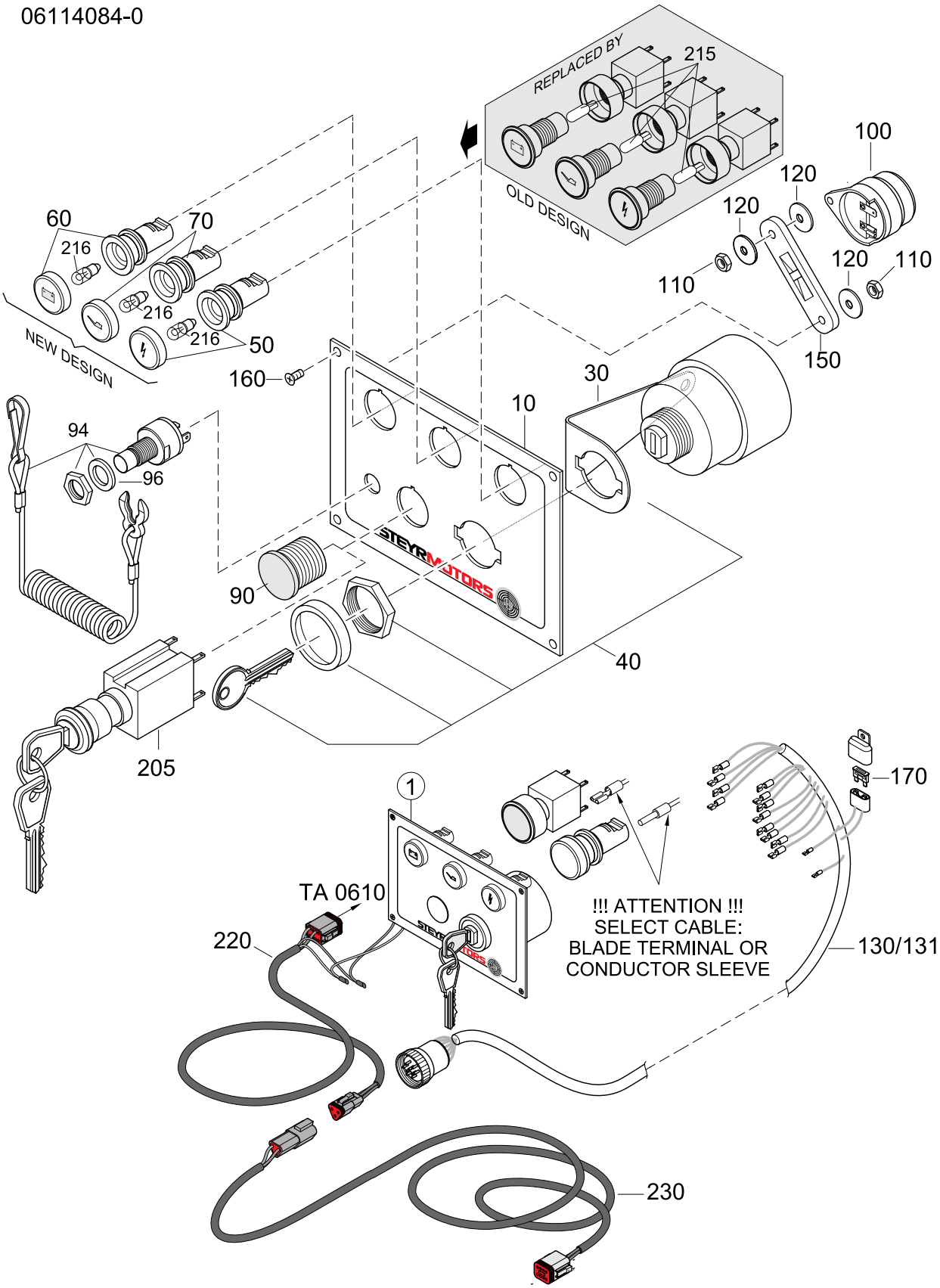

SWITCH PANEL FOR DISPLAY
TILL -->2010

84 MARINE TURBO DIESEL +SOLAS

06114084-0

Pos.	Part.-No.	Qty	Designation	Step
1	Z002123-0	1	SWITCH PANEL ASSY. (ALTERN. ISKRA)	.2
10	2179134-1	1	INSTRUMENT PANEL	..3
30	2179173-0	1	SHACKLE STRAIN RELIEF, PANEL (NEW DESIGN)	..3
40	2178761-4	1	GLOW-START SWITCH ASSY.(SPARE)	..3
50	2179290-0	1	WARNING-LIGHT CHECK ENGI. ASSY	..3
60	2179291-0	1	WARNING-LIGHT BATTERY CHARGE ASSY. 12V	..3
70	2179292-0	1	WARNING-LIGHT ENGINE-OIL ASSY.	..3
90	2179320-0	1	BLIND PLUG, BLACK	..3
94	Z002073-0	1	EMERGENCY CUTOFF SWITCH KIT	..3
96	2176170-0	1	O-RING 15 x 2	..3
100	2178760-1	1	HORN AUDIBLE WARNING	..3
110	3870051-0	4	HEX.NUT ISO 4032-M4-A2-70	..3
120	3930072-0	6	WASHER LARGE SERIES DIN 9021-4.3-A2	..3
130	2206290-1	1	CABLE ASSY. INSTRUMENT 7m (BLADE TERMINAL)	..3
131	Z002669-0	1	CABLE ASSY. INSTRUMENT 7m (CONDUCTOR SLEEVE) SPARE PART	..3
150	2178870-1	1	FIXTURE, CABLE TIE (OLD DESIGN)	..3
160	9000192-0	4	CR.REC.COUNT.SUNK HD.TPG.SCR. ISO 7050-ST3.5x16	..3
170	11345	1	FUSE 10A, RED	..3
205	2178761-2	1	KEY-SWITCH CONSTANT REVOLUTION (ACCESSORY)	..3
215	2178242-4	3	GLASS SOCKET LAMP 12V 2W x 4,6D (OLD DESIGN)	..3
216	2179162-0	3	MINIATUR LAMP 12V/2W 10x28 (NEW DESIGN)	..3
220	Z002131-0	1	CONNECTING CABLE-CANBUS(SPARE) WITH CONNECTOR	.2
230	2179150-1	1	INTERMEDIATE CABLE - CANBUS WITH CONNECTOR	.2

STEYRMOTORS
INNOVATION WITH LIGHTNESS

84 MARINE TURBO DIESEL +SOLAS

SWITCH PANEL FOR DISPLAY FROM 2010-->

06112184-1

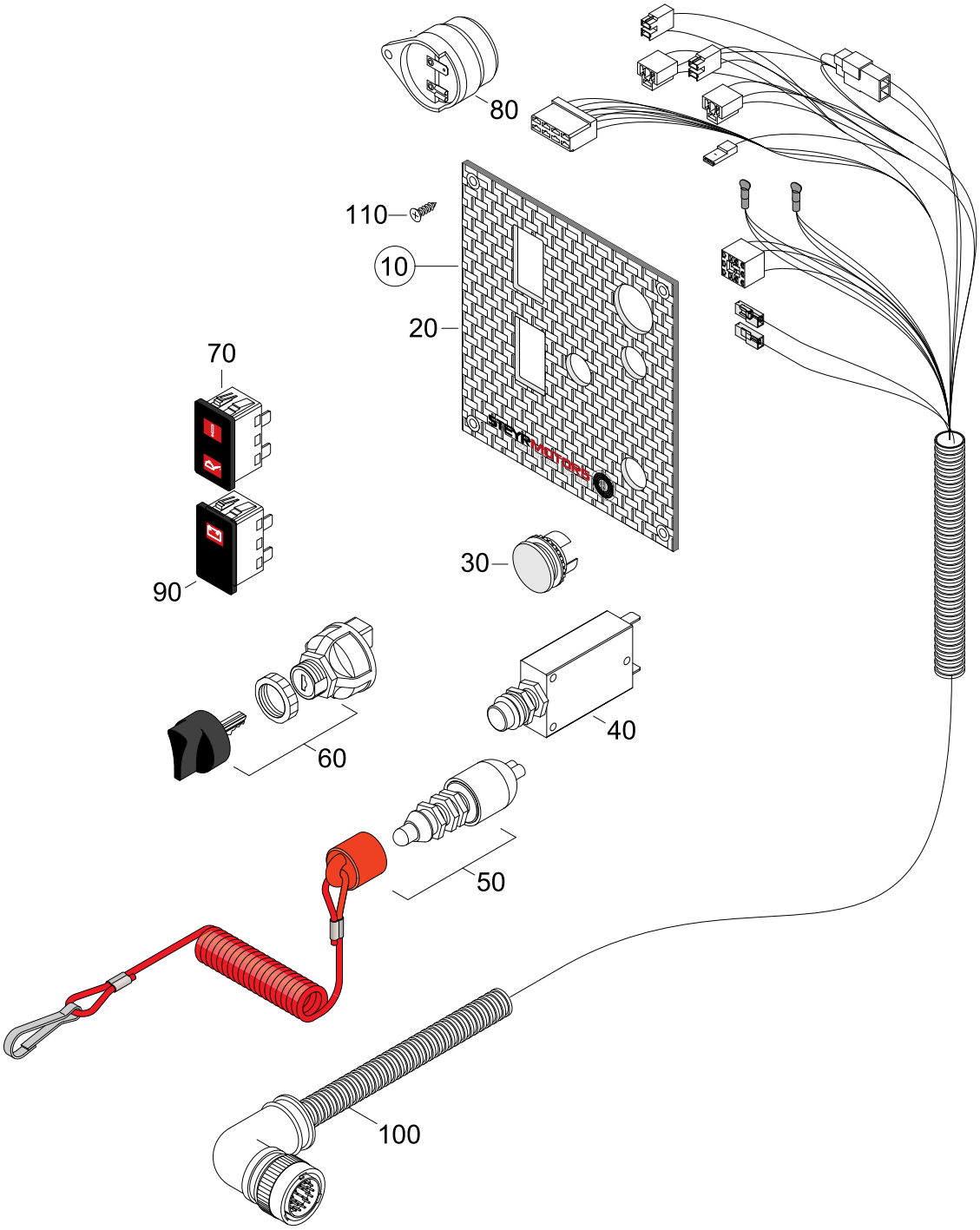

SWITCH PANEL FOR DISPLAY
FROM 2010-->

84 MARINE TURBO DIESEL +SOLAS

06112184-1

Pos.	Part.-No.	Qty	Designation	Step
10	2179966-0	1	SWITCH PANEL ASSY. (LED) (FOR SCC-DISPLAY)	.2
20	2179983-0	1	FRONT PLATE, SWITCH PANEL	..3
30	2179320-0	1	BLIND PLUG, BLACK	..3
40	Z002180-0	1	THERMO PROTECTION SWITCH ASSY.	..3
50	2179978-0	1	EMERGENCY CUTOFF SWITCH	..3
60	2179975-0	1	GLOW-START SWITCH	..3
70	Z002196-0	1	WARNING LED, CHECK ENGINE & OIL PRESSURE	..3
80	2178760-1	1	HORN AUDIBLE WARNING	..3
90	Z002197-0	1	WARNING LED, BATTERY CHARGE	..3
100	2180076-0	1	CABLE ASSY. SWITCH PANEL	..3
110	9000817-0	4	CR.REC.COUNT.SUNK HD.TPG.SCR. 3.5x16	..3

STEYRMOTORS
INNOVATION WITH LIGHTNESS

84 MARINE TURBO DIESEL +SOLAS

PUSH BUTTON PANEL SOLAS FOR DISPLAY TILL -->2010

06124084-0

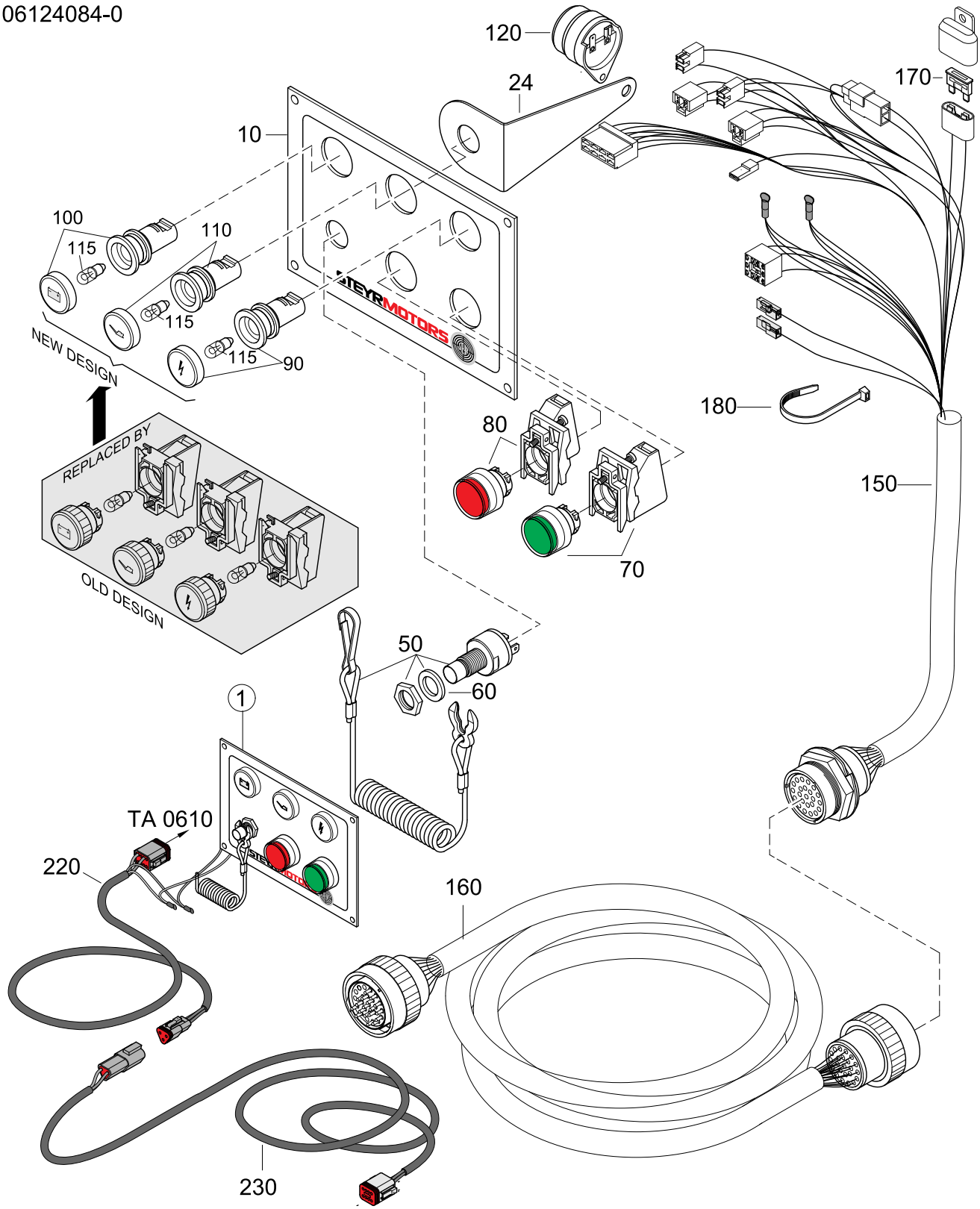

PUSH BUTTON PANEL SOLAS FOR DISPLAY TILL -->2010

84 MARINE TURBO DIESEL +SOLAS

06124084-0

Pos.	Part.-No.	Qty	Designation	Step
1	Z002124-0	1	PUSH BUTTON PANEL ASSY. SOLAS (ALTERN. ISKRA)	.2
10	2179135-1	1	BASE PLATE INSTRUMENT PANEL SOLAS	..3
24	2179173-1	1	SHACKLE STRAIN RELIEF, PANEL	..3
50	Z002073-0	1	EMERGENCY CUTOFF SWITCH KIT	..3
60	2176170-0	1	O-RING 15 x 2	..3
70	2179294-0	1	SWITCH ASSY. START GREEN	..3
80	2179293-0	1	IGNITION SWITCH RED ASSY.	..3
90	2179290-0	1	WARNING-LIGHT CHECK ENGI. ASSY	..3
100	2179291-0	1	WARNING-LIGHT BATTERY CHARGE ASSY. 12V	..3
110	2179292-0	1	WARNING-LIGHT ENGINE-OIL ASSY.	..3
115	2179162-0	3	MINIATUR LAMP 12V/2W 10x28	..3
120	2178760-1	1	HORN AUDIBLE WARNING	..3
130	3870051-0	2	HEX.NUT ISO 4032-M4-A2-70	..3
140	3930072-0	2	WASHER LARGE SERIES DIN 9021-4.3-A2	..3
150	Z002671-0	1	CABLE ASSY. INSTR. 1.5m SOLAS (SPARE PART)	..3
160	2206291-1	1	INTERMEDIATE CABLE 5m SAME 23-WAY CON.	..3
170	11345	1	FUSE 10A, RED	..3
180	3171035-0	6	TIE STRAP N 05199-B4,8x180	..3
220	Z002131-0	1	CONNECTING CABLE-CANBUS(SPARE) WITH CONNECTOR	.2
230	2179150-1	1	INTERMEDIATE CABLE - CANBUS WITH CONNECTOR	.2

STEYRMOTORS
INNOVATION WITH LIGHTNESS

84 MARINE TURBO DIESEL +SOLAS

PUSH BUTTON PANEL SOLAS FOR DISPLAY FROM 2010-->

06122184-1

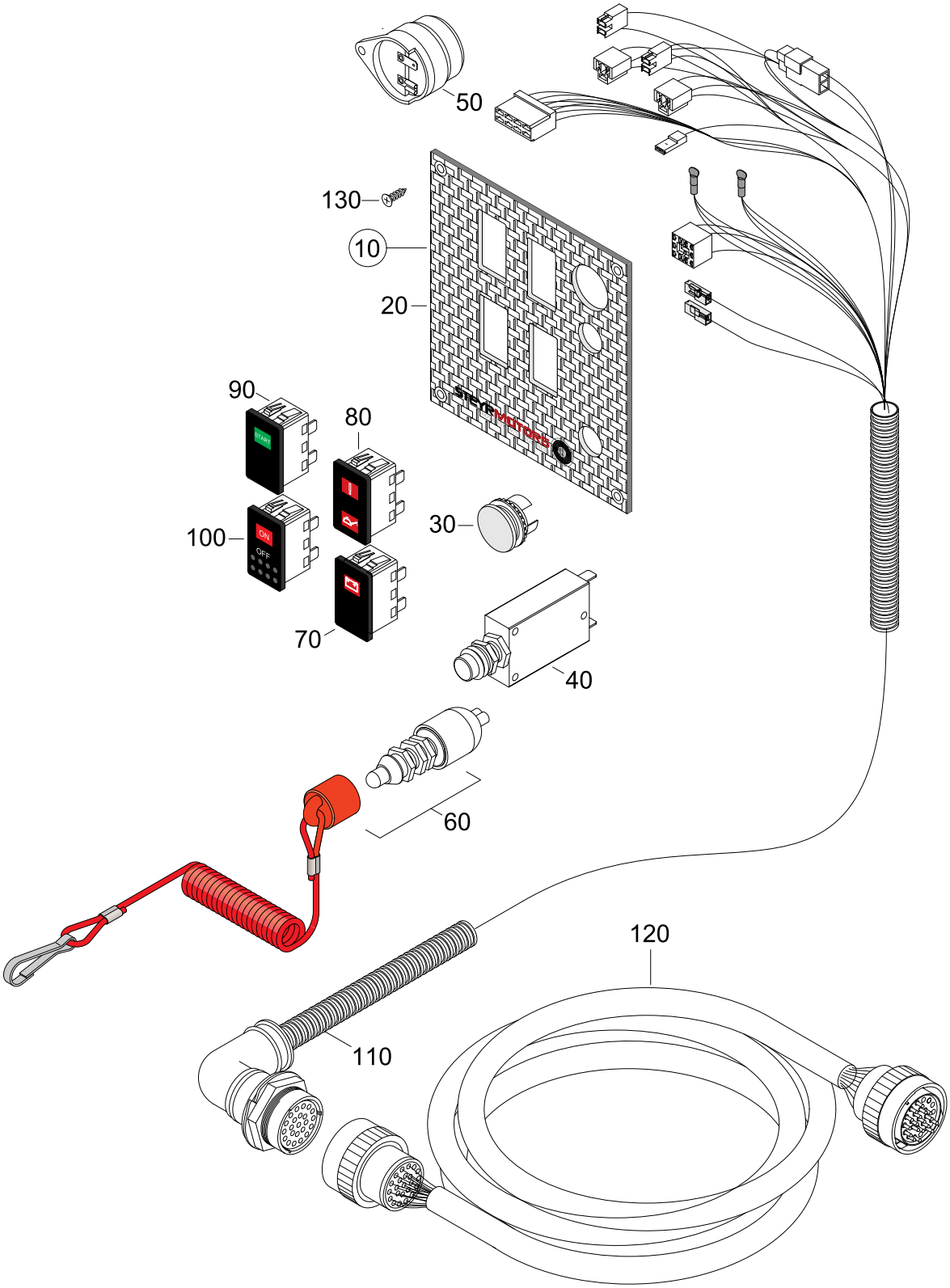

PUSH BUTTON PANEL SOLAS FOR DISPLAY FROM 2010-->

84 MARINE TURBO DIESEL +SOLAS

06122184-1

Pos.	Part.-No.	Qty	Designation	Step
10	2179967-0	1	PUSH BUTTON PANEL (LED) SOLAS (FOR SCC-DISPLAY)	.2
20	2179984-0	1	FRONT PLATE, PUSH BUTTON PANEL	..3
30	2179320-0	1	BLIND PLUG, BLACK	..3
40	Z002180-0	1	THERMO PROTECTION SWITCH ASSY.	..3
50	2178760-1	1	HORN AUDIBLE WARNING	..3
60	2179978-0	1	EMERGENCY CUTOFF SWITCH	..3
70	Z002197-0	1	WARNING LED, BATTERY CHARGE	..3
80	Z002196-0	1	WARNING LED, CHECK ENGINE & OIL PRESSURE	..3
90	Z002198-0	1	START SWITCH, GREEN	..3
100	Z002199-0	1	IGNITION SWITCH	..3
110	2180077-0	1	CABLE ASSY.PUSH-BUTTON PANEL	..3
120	2206291-1	1	INTERMEDIATE CABLE 5m	..3
130	9000817-0	4	CR.REC.COUNT.SUNK HD.TPG.SCR. 3.5x16	..3

STEYRMOTORS
INNOVATION WITH LIGHTNESS

84 MARINE TURBO DIESEL +SOLAS

EXTENSION CABLE INSTRUMENTS (ACCESSORY)

06136184-0

NOTE: NOT COMPATIBLE WITH "SOLAS" INSTRUMENT PANEL

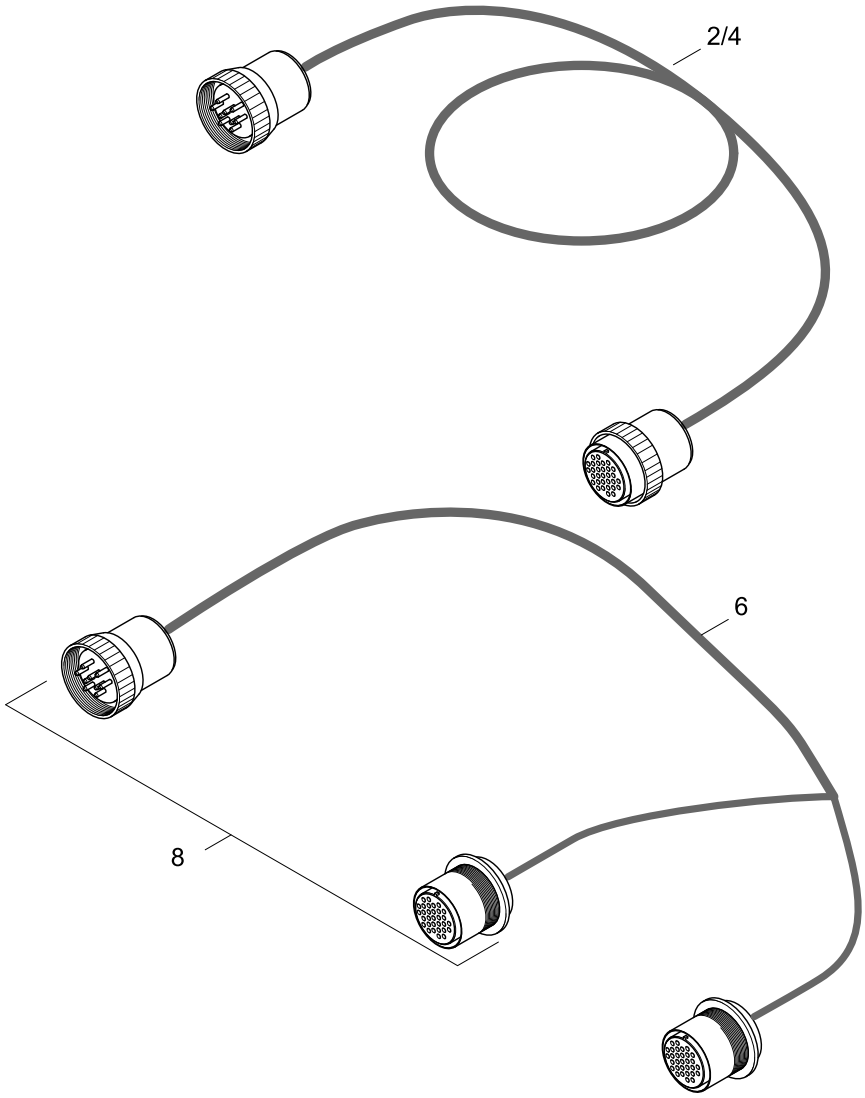

EXTENSION CABLE INSTRUMENTS (ACCESSORY)

84 MARINE TURBO DIESEL +SOLAS

06136184-0

Pos.	Part.-No.	Qty	Designation	Step
2	2206291-0	1	EXTENSION CABLE 6,3m 23-WAY CON.	.2
4	2206291-2	1	EXTENSION CABLE 10m 23 WAY CON.	.2
6	2206292-0	1	Y-JUNCTION CABLE 1m 23-WAY CON.	.2
8	Z002410-0	1	CABLE-PLUG PAIR COMPL. 23-POLE	.2

NOTE: NOT COMPATIBLE WITH "SOLAS" INSTRUMENT PANEL

STEYRMOTORS
INNOVATION WITH LIGHTNESS

84 MARINE TURBO DIESEL +SOLAS

TRANSMISS., MOUNTING BRACKETS, PIPES

07004034-0

ZF 25, 25A

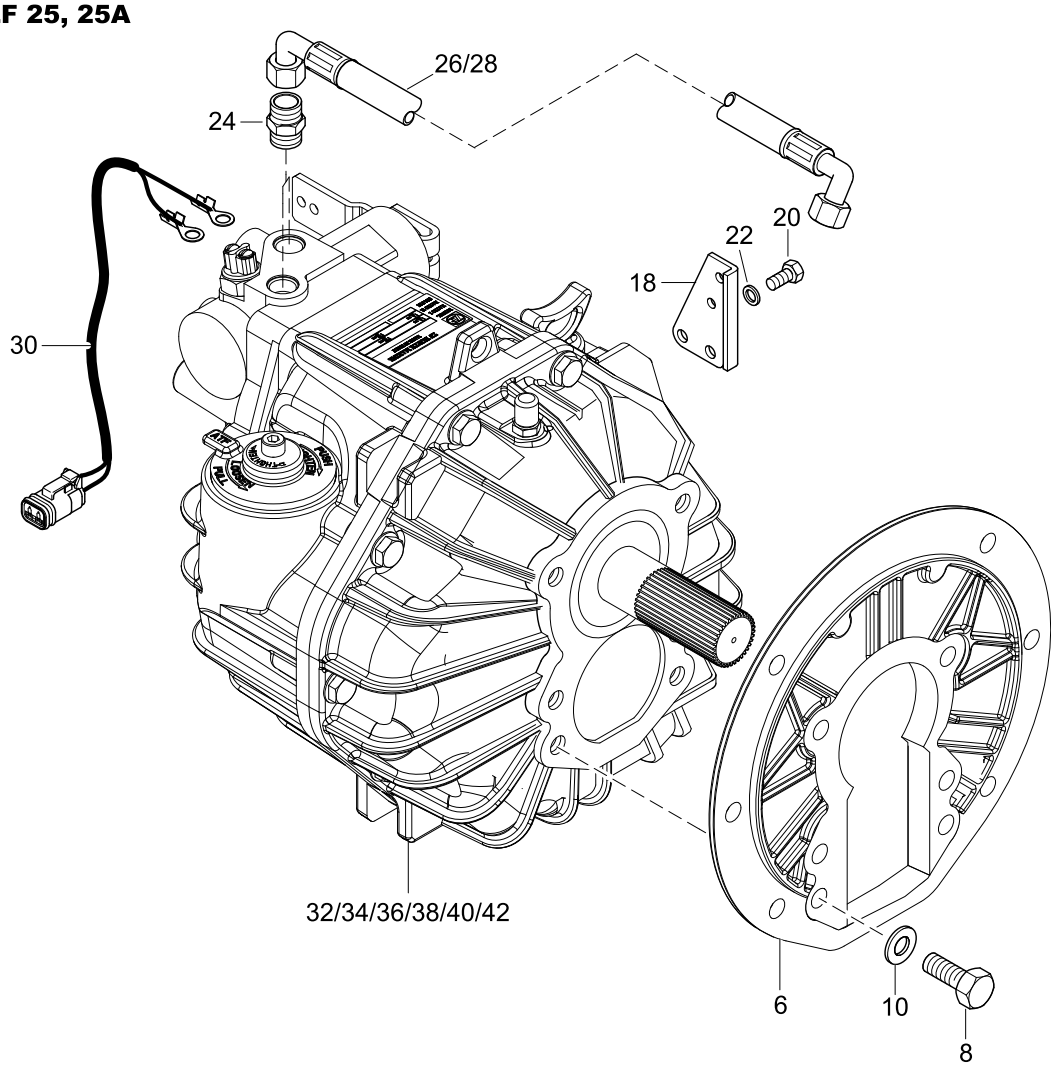

TRANSMISS., MOUNTING BRACKETS, PIPES

84 MARINE TURBO DIESEL +SOLAS

07004034-0

Pos.	Part.-No.	Qty	Designation	Step
6	2179105-0	1	ADAPTOR FLANGE B/W - ZF 25 & 25A	.2
8	3802527-0	6	HEX.HD.SCR. ISO 4017-M10x30-A4	.2
10	3932025-0	6	SPRING WASHER DIN 137-A10-FST-A3C	.2
18	2178711-9	1	BRACKET SHIFT CABLE PAINTED	.2
20	3800224-0	2	HEX.HD.SCR. ISO 4017-M8x20-A2-70	.2
22	3930103-0	2	WASHER DIN 125-8.4-140HV-A2	.2
24	Z011655-0	2	THREADED SOCKET 3/8NPT-M18x1,5	.2
26	2178731-0	1	OIL HOSE L=690mm	.2
28	2178732-0	1	OIL HOSE L=825mm	.2
30	2178745-1	1	HARNESS GEAR-SWITCH	.2
32	2179009-6	1	GEARBOX ASSY. ZF 25 A I=2.29 (PAINTED)	.2
34	2179009-5	1	GEARBOX ASSY. ZF 25 A I=2.71 (PAINTED)	.2
36	2179009-7	1	GEARBOX ASSY. ZF 25 A I=1.93 (PAINTED)	.2
38	2179009-8	1	GEARBOX ASSY. ZF 25 A I=1.55 (PAINTED)	.2
40	2179106-5	1	GEARBOX ASSY. ZF 25 I=1.97 (PAINTED)	.2
42	2179106-6	1	GEARBOX ASSY. ZF 25 I=2.80 (PAINTED)	.2

STEYRMOTORS
INNOVATION WITH LIGHTNESS

84 MARINE TURBO DIESEL +SOLAS

TRANSMISSION-SHAFT, PTO-SHAFT (ALU)

07016184-0

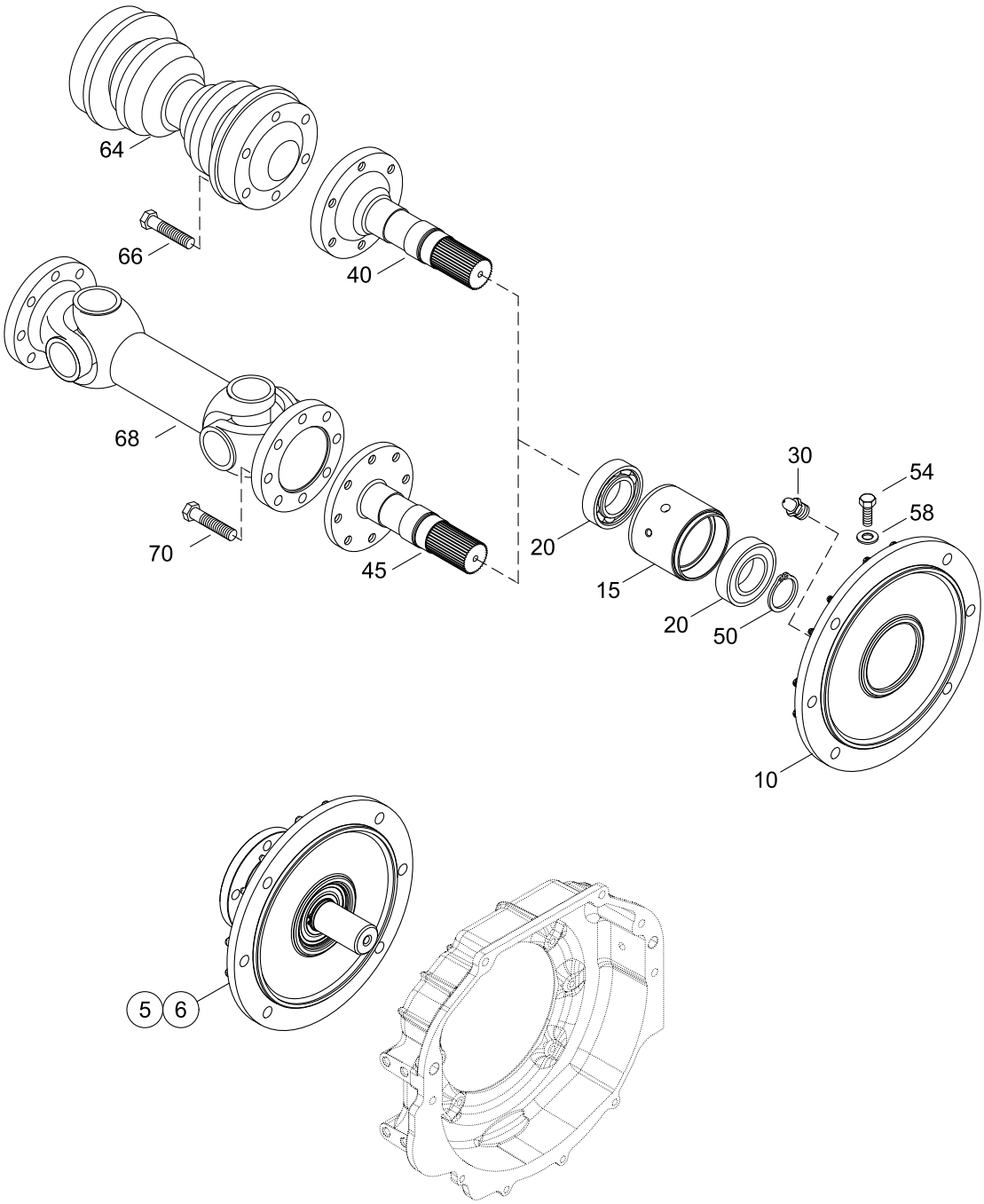

ALU - HOUSING

TRANSMISSION-SHAFT, PTO-SHAFT (ALU)

84 MARINE TURBO DIESEL +SOLAS

07016184-0

Pos.	Part.-No.	Qty	Designation	Step
5	Z002098-0	1	ADAPTER SHAFT ASSY. - 6-HOLES (PAINTED)	.2
6	Z002099-0	1	ADAPTER SHAFT ASSY. - 8-HOLES (PAINTED)	.2
10	2178815-1	1	ADAPTER HOUSING JET (ALU CASTING)	..3
15	2179328-0	1	BEARING RETAINER	..3
20	3311181-0	2	DEEP GROOVE BALL BEARING DIN 625-RS1	..3
30	3963112-0	1	LUBRICATING NIPPLE, CONE DIN 71412-AM8x1-A3F	..3
40	2178814-0	1	ADAPTER SHAFT ENGINE-PROPULSIO N (6-HOLES)	..3
45	2178814-1	1	ADAPTER SHAFT ENGINE-PROPULSIO N (8-HOLES)	..3
50	3933251-0	1	RETAINING RING SHAFT DIN 471-35x1,5	..3
54	3802442-0	2	HEX.HD.SCR. ISO 4017-M8x40-8.8-A2C	..3
58	O125134-0	2	WASHER LARGE	..3
64	2178836-1	1	PROPELLER SHAFT SHORT L=210 +/-24mm	.2
66	9000198-0	6	HEX.HD.BOLT ISO 4014-M12x65-8.8-A3C	.2
68	2178836-0	1	SLIDING SHAFT LONG L=354mm +70	.2
70	3802515-0	8	HEX.HD.SCR. ISO 4017-M10x20-8.8-A3C	.2

STEYRMOTORS
INNOVATION WITH LIGHTNESS

84 MARINE TURBO DIESEL +SOLAS

HYDRAULIC PUMP

14084084-0

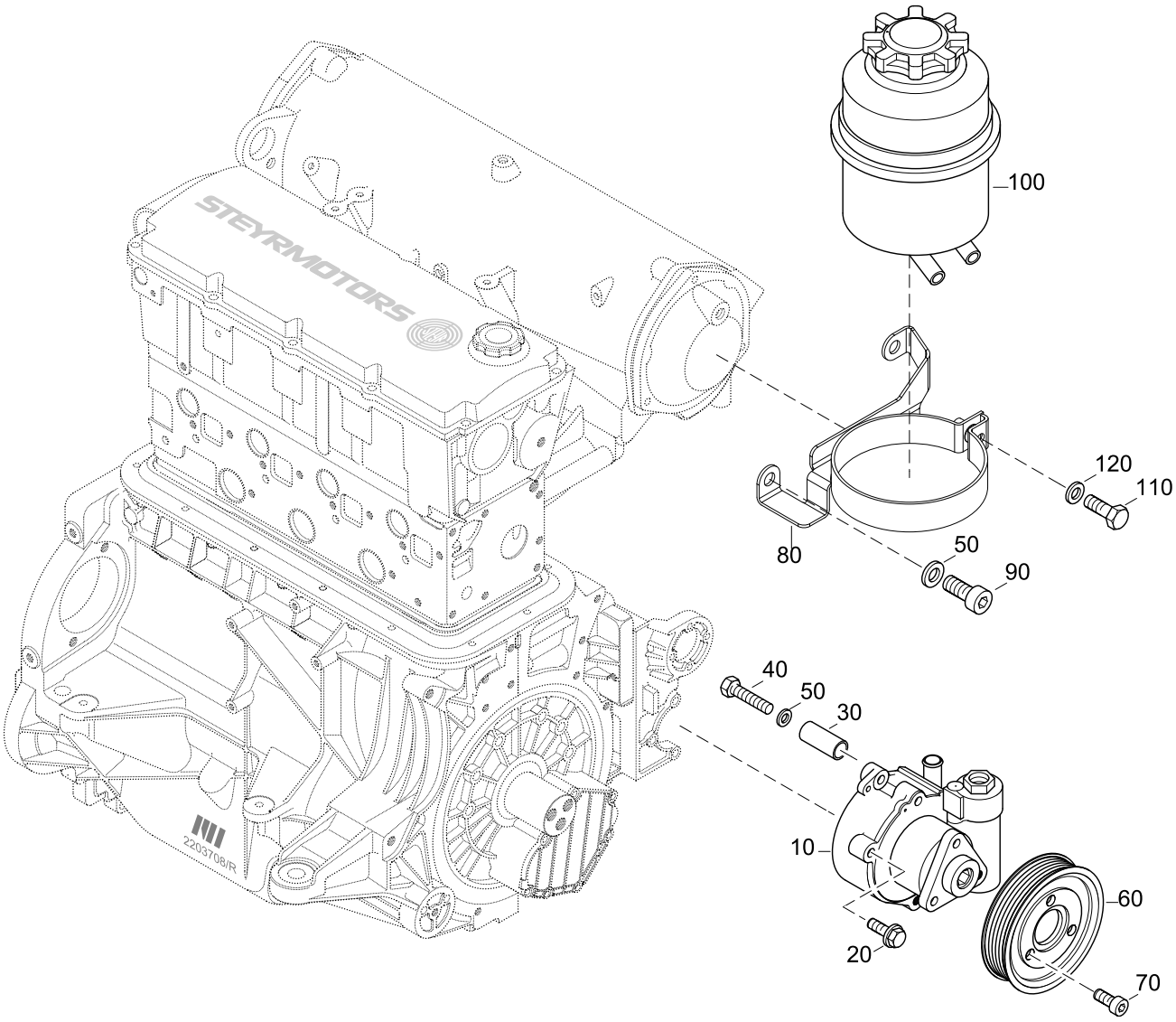

HYDRAULIC PUMP

84 MARINE TURBO DIESEL +SOLAS

14084084-0

Pos.	Part.-No.	Qty	Designation	Step
10	2203712-9	1	POWER STEERING PUMP (PAINTED)	.2
20	9000278-0	3	HEX.FLANGE BOLT EN 1665-M8x35-8.8-A2C	.2
30	2203750-0	1	CLAMPING SLEEVE PWR.STRG.PUMP	.2
40	3802442-0	1	HEX.HD.SCR. ISO 4017-M8x40-8.8-A2C	.2
50	3930103-0	3	WASHER DIN 125-8.4-140HV-A2	.2
60	2203743-0	1	PULLEY PWR.STRG.PUMP POLY-V	.2
70	3860152-0	3	HEX.SOCK. HD.CAP SCR. DIN 912-M8x16-A2-70	.2
80	2203759-0	1	FASTENI. OILTANK PWR.STRG.PUMP 4 CYL. MARINE	.2
90	3862462-0	2	HEX.SOCK. HD.CAP SCR. DIN 912-M8x60-8.8-A2C	.2
100	2178869-1	1	OILTANK POWER STEERING PUMP	.2
110	3800223-0	1	HEX.HD.SCR. ISO 4017-M6x60-A2-70	.2
120	3930070-0	1	WASHER DIN 125-6-140HV-A2	.2
130	Z002067-1	1	POWER STEERING PUMP & LINES KIT 4 CYL.	.2

STEYRMOTORS
INNOVATION WITH LIGHTNESS

84 MARINE TURBO DIESEL +SOLAS

HYDRAULIC PIPES

14094084-0

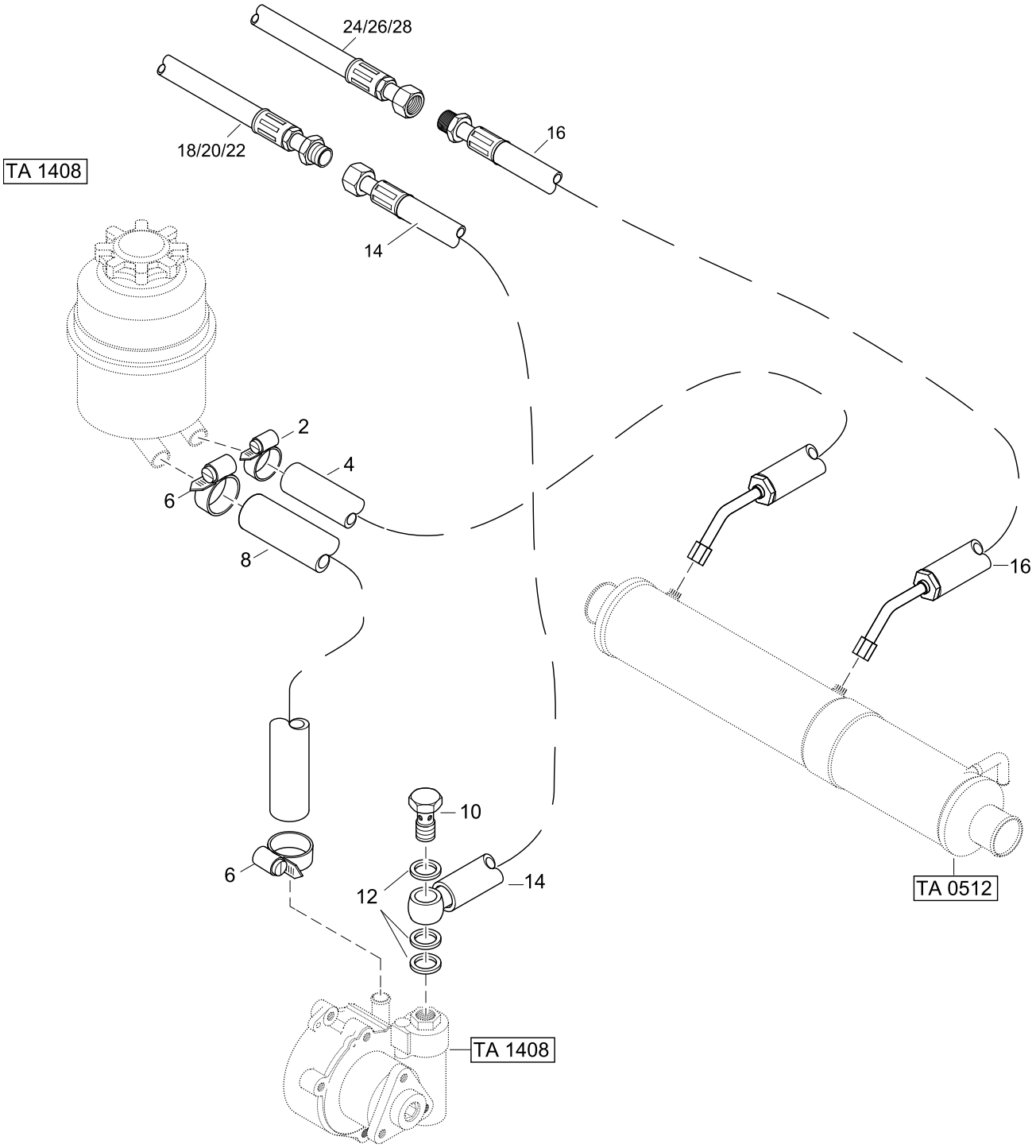

HYDRAULIC PIPES

84 MARINE TURBO DIESEL +SOLAS

14094084-0

Pos.	Part.-No.	Qty	Designation	Step
2	2178655-0	1	HOSE CLAMP 12-20/9	.2
4	2178936-1	1	HOSE, OIL COOLER-OILTANK	.2
6	2177753-0	2	HOSE CLAMP 16-25/9 EN 10088-1	.2
8	2178573-0	1	HOSE, RESERVOIR HYDR. PUMP	.2
10	2180201-0	1	HOLLOW SCREW M16x1,5 RW	.2
12	3098016-0	3	SEALING RING DIN 7603-A16x20-CU	.2
14	2178905-0	1	HOSE, PUMP-CYLINDER	.2
16	2178906-0	1	HOSE, CYLINDER-OIL COOLER	.2
18	2178905-M	1	HOSE, ADAPTER PUMP-CYL. BRAVO STERN DRIVE (SCREWED)	.2
20	2178905-S	1	HOSE W.QUICK COUPLER PUMP —> CYL. BRAVO STERN DR.	.2
22	2178905-A	1	HOSE PUMP-CYL. ALPHA & K.COBRA STERN DRIVE	.2
24	2178906-M	1	HOSE ZYL. BRAVO STERN DRIVE - OIL COOLER (SCREWED)	.2
26	2178906-S	1	HOSE W. QUICK COUPLER ZYL. BRAVO STERNDR.—>OIL COOLER	.2
28	2178906-A	1	HOSE CYL. ALPHA & K.COBRA ST.DRIVE - COOLER	.2

STEYRMOTORS
INNOVATION WITH LIGHTNESS

84 MARINE TURBO DIESEL +SOLAS

ENGINE PREHEATING (ACCESSORY)

22076184-0

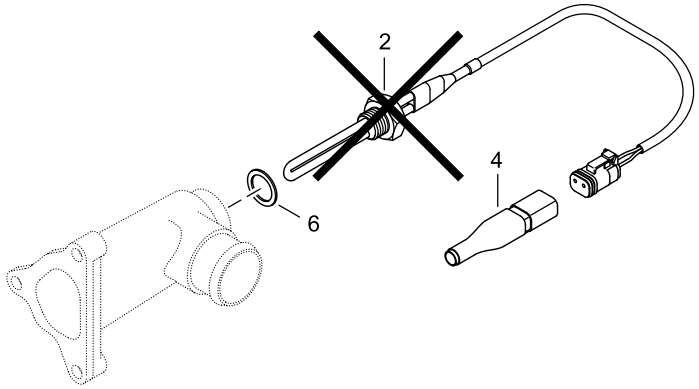

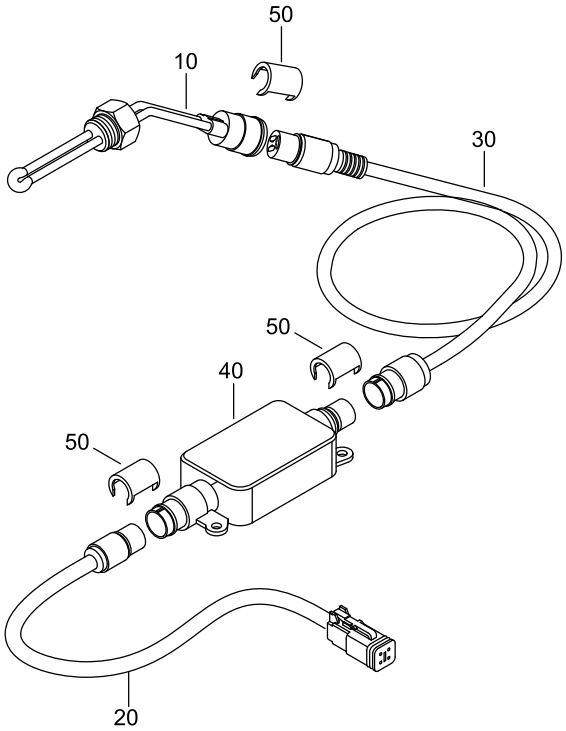

ENGINE PREHEATING (ACCESSORY)

84 MARINE TURBO DIESEL +SOLAS

22076184-0

Pos.	Part.-No.	Qty	Designation	Step
2	Z002202-0	1	KIT BLOCK HEATING DEVICE 42V - 300W (RETROFITTING KIT)	.2
4	2178982-5	1	THERMO SWITCH, PREHEATING DEVICE	.2
6	3098026-0	1	SEALING RING DIN 7603-A22x27-CU	.2
10	2180393-0	1	BLOCK HEATING DEVICE 42V - 300W	.2
20	2180396-0	1	CABLE ENGINE PREHEATING DEVICE 0,5m	.2
30	2206318-0	1	CABLE ENGINE PREHEATING DEVICE, 2m	.2
40	2180395-0	1	THERMO SWITCH	.2
50	2180695-0	3	SAFETY LOCK	.2

STEYRMOTORS
INNOVATION WITH LIGHTNESS

84 MARINE TURBO DIESEL +SOLAS

INTEGR. FLYWHEELGENERATOR (IFG) (ACCESSORY)

40004084-0

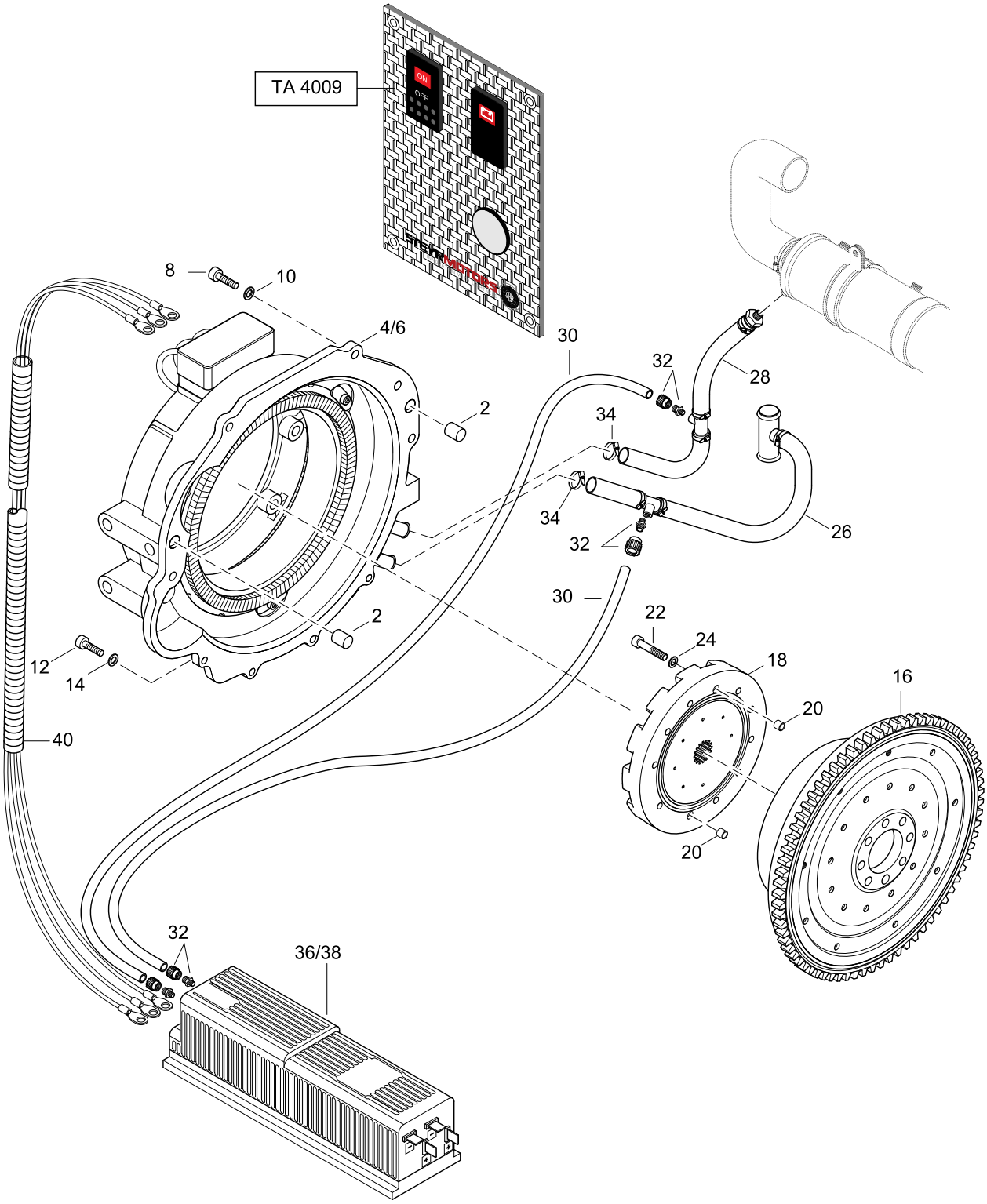

INTEGR. FLYWHEELGENERATOR (IFG) (ACCESSORY)

84 MARINE TURBO DIESEL +SOLAS

40004084-0

Pos.	Part.-No.	Qty	Designation	Step
2	9000490-0	2	PARALLEL PIN 16m6x22-ST	.2
4	Z002104-0	1	S.P.FLYWHEEL HSG. IFG 24V ASSY (PAINTED)	.2
6	Z002105-0	1	S.P.FLYWHEEL HSG. IFG 12V ASSY (PAINTED)	.2
8	3862545-0	5	HEX.SOCK. HD.CAP SCR. DIN 912-M10x35-A2-70	.2
10	3930075-0	5	WASHER DIN 125 A10.5-140HV-A2	.2
12	3862433-0	4	HEX.SOCK. HD.CAP SCR. DIN 912-M8x30-A2-70	.2
14	3930103-0	4	WASHER DIN 125-8.4-140HV-A2	.2
16	Z002430-0	1	S.P.FLYWHEEL 4 CYL. „IFG“ ASSY (BALANCED)	.2
18	Z002106-0	1	S.P. COUPLER „IFG“	.2
20	2203543-0	2	FITTING SLEEVE DM11 (TO M8)	.2
22	9000473-0	12	HEX.SOCK. HD.CAP SCR. DIN 912-M8x100-12.9-DAC A500	.2
24	3930103-0	12	WASHER DIN 125-8.4-140HV-A2	.2
26	Z002107-0	1	COOLING WATER HOSE ASSY. „IFG“ (RETURN)	.2
28	Z002108-0	1	COOLING WATER HOSE ASSY. „IFG“ (SUPPLY)	.2
30	2179298-0	2	HOSE 8x1.25 L=2000mm	.2
32	2179297-0	4	FAST SCREW CONNECTION	.2
34	2178655-0	8	SCHLAUCHSCHELLE 12-20/9	.2
36	Z002110-0	1	ELECTR.CONTROL SYSTEM IFG 24V	.2
38	Z002111-0	1	ELECTR.CONTROL SYSTEM IFG 12V	.2
40	Z002112-0	1	KIT CONNECTING CABLE IFG	.2

STEYRMOTORS
INNOVATION WITH LIGHTNESS

84 MARINE TURBO DIESEL +SOLAS

PUSH BUTTON PANEL „IFG“
TILL -->2010

40096184-0

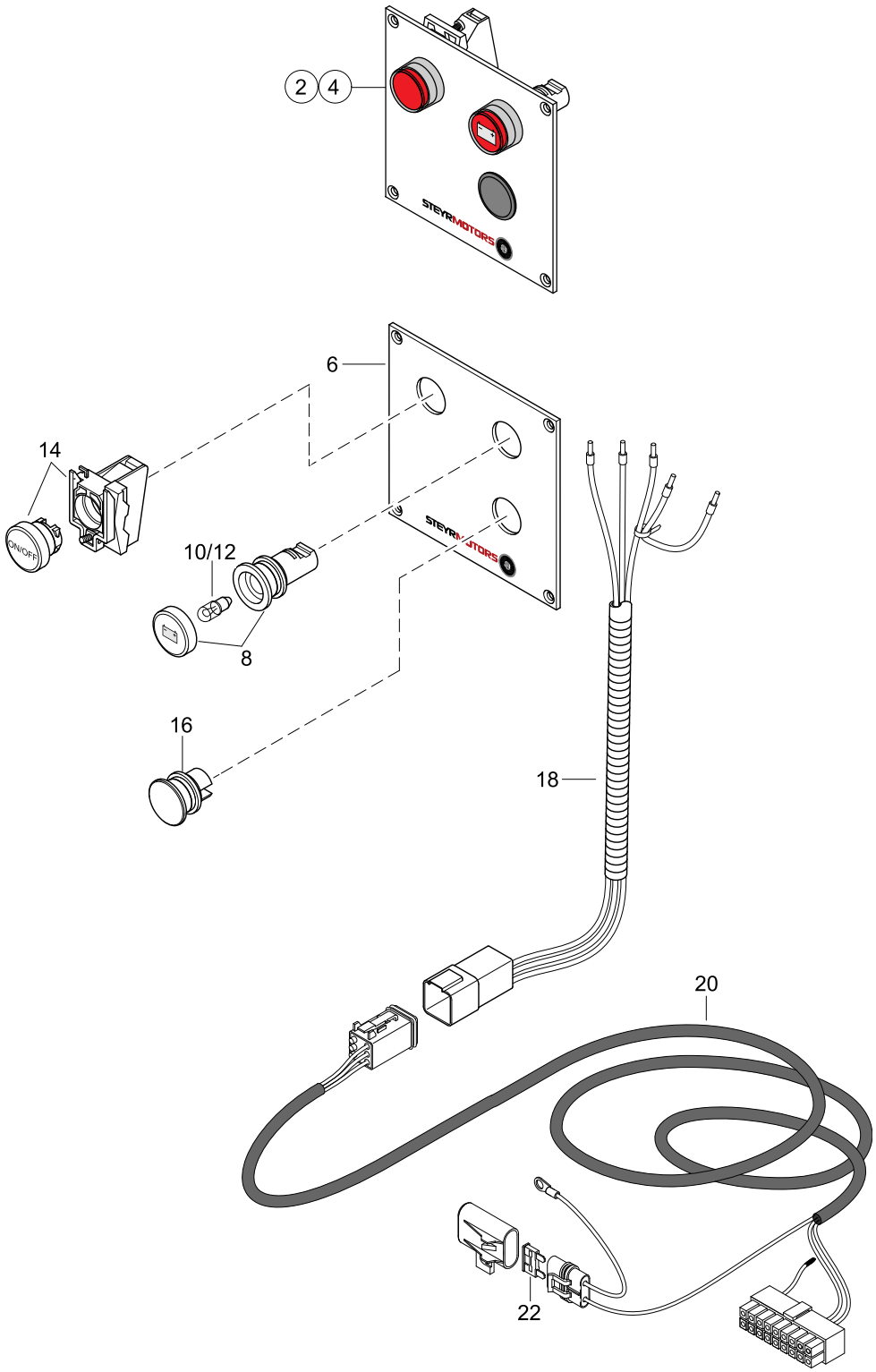

PUSH BUTTON PANEL „IFG“
TILL -->2010

84 MARINE TURBO DIESEL +SOLAS

40096184-0

Pos.	Part.-No.	Qty	Designation	Step
2	Z002114-0	1	PUSH BUTTON PANEL IFG 24V ASSY	.2
4	Z002113-0	1	PUSH BUTTON PANEL IFG 12V ASSY	.2
6	2179284-0	1	INSTRUMENT PANEL IFG	..3
8	Z002115-0	1	WARNING-LIGHT BATTERY CHARGE ASSY. 12V & 24V	..3
10	2179162-0	1	MINIATUR LAMP 12V/2W 10x28	..3
12	2179141-0	1	MINIATUR LAMP 24V/3W 10x28	..3
14	2179293-5	1	IGNITION SWITCH RED ASSY.	..3
16	2179320-0	1	BLIND PLUG, BLACK	..3
18	2206298-0	1	WIRING HARNESS ASSY. IFG-PANEL	..3
20	2206299-0	1	CONNE. CABLE AY. 8m IFG-PANEL	..3
22	11345	1	FUSE 10A, RED	..3

STEYRMOTORS
INNOVATION WITH LIGHTNESS

84 MARINE TURBO DIESEL +SOLAS

PUSH BUTTON PANEL „IFG“ FROM 2010-->

40096184-1

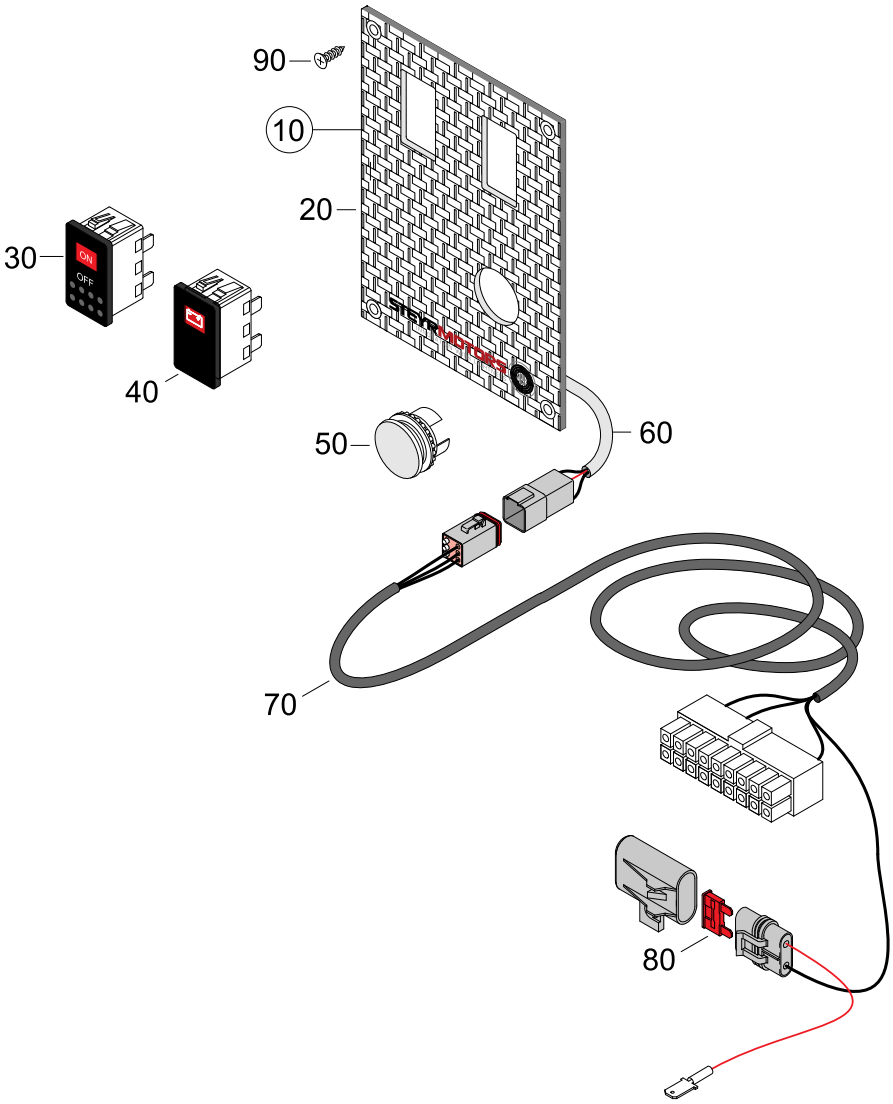

PUSH BUTTON PANEL „IFG“
FROM 2010-->

84 MARINE TURBO DIESEL +SOLAS

40096184-1

Pos.	Part.-No.	Qty	Designation	Step
10	2179968-0	1	PUSH BUTTON PANEL IFG (LED)	.2
20	2180092-0	1	INSTRUMENT PANEL IFG	..3
30	Z002199-0	1	IGNITION SWITCH	..3
40	Z002197-0	1	WARNING LED, BATTERY CHARGE	..3
50	2179320-0	1	BLIND PLUG, BLACK	..3
60	2206298-0	1	WIRING HARNESS ASSY. IFG-PANEL	..3
70	2206299-0	1	CONNE. CABLE AY. 8m IFG-PANEL	..3
80	11345	1	FUSE 10A, RED	..3
90	9000817-0	4	CR.REC.COUNT.SUNK HD.TPG.SCR. 3.5x16	..3

STEYRMOTORS
INNOVATION WITH LIGHTNESS

84 MARINE TURBO DIESEL +SOLAS

HYBRID

41006184-0

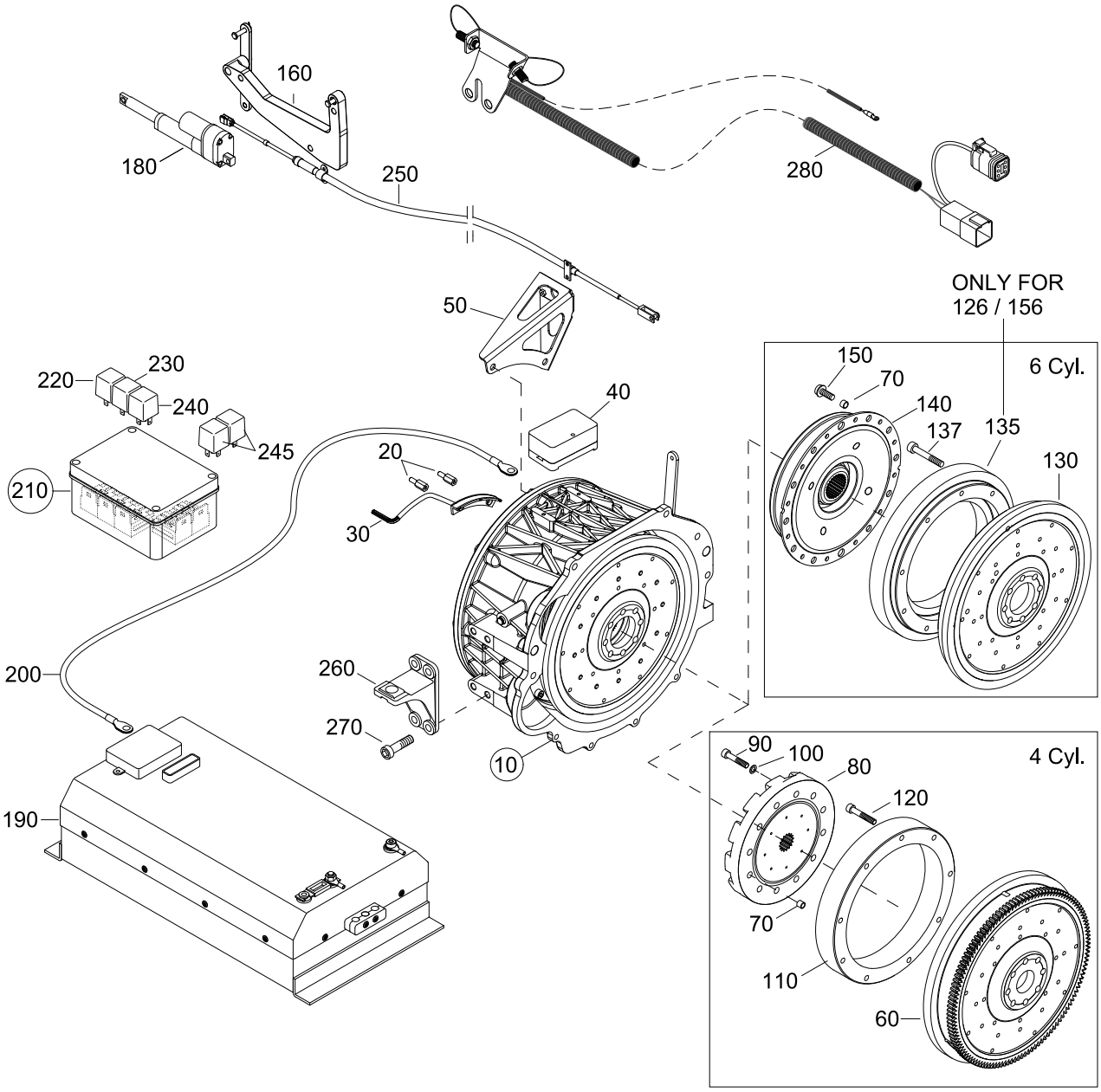

HYBRID

84 MARINE TURBO DIESEL +SOLAS

41006184-0

Pos.	Part.-No.	Qty	Designation	Step
10	Z002171-0	1	ELECTRIC MOTOR ASSY.	.2
20	2179623-1	2	DISTANCE BOLT	..3
30	Z002173-0	1	HALL SENSOR ASSY.	..3
40	2179758-0	1	CONNECTION PLATE	..3
50	2180122-0	1	GEAR SHIFT BRACKET	..3
60	2203870-0	1	FLYWHEEL ASSY. RW	.2
70	2203543-0	2	FITTING SLEEVE	.2
80	Z002106-0	1	S.P. COUPLER	.2
90	9000520-0	12	HEX.SOCK. HD.CAP SCR. ISO 4762-M8x50-10.9-DAC	.2
100	3930103-0	12	WASHER DIN 125-8.4-140HV-A2	.2
110	2180415-0	1	FLYWHEEL MASS	.2
120	3862462-0	9	HEX.SOCK. HD.CAP SCR. DIN 912-M8x60-8.8-A2C	.2
130	2177734-N	1	FLYWHEEL ASSY. RW	.2
135	2180522-0	1	FLYWHEEL MASS	.2
137	3862452-0	9	HEX.SOCK. HD.CAP SCR. DIN 912-M8x50-8.8-A2C	.2
140	Z026060-0	1	S.P. COUPLER	.2
150	9000685-0	12	LOCKING SCREW-M8x16-10.9	.2
160	2179739-1	1	CONTROL BRACKET ASSY.	.2
180	Z002174-0	1	CONTROL MOTOR, CLUTCH	.2
190	Z002195-0	1	ELECTR.CONTROL SYSTEM	.2
200	Z021009-0	3	CONNECTING CABLE	.2
210	Z002175-0	1	RELAISBOX ASSY.	.2
220	2179961-0	1	PROGRAMMED RELAIS, A12	..3
230	2179960-0	1	PROGRAMMED RELAIS, A11	..3
240	2179959-0	1	PROGRAMMED RELAIS, A10	..3
245	9000183-0	2	RELAY 12V 40A	..3
250	Z002178-0	1	GEAR SHIFT CABLE ASSY.	.2
260	2178722-1	2	BRACKET FLYWHEEL HOUSING	.2
270	9000081-0	8	HEX.SOCK.HD.CAP SCR. DIN 912-M12x35-8.8-A3C	.2
280	Z026154-0	1	POSITION SENSORS ASSY. (SPARE PART)	.2

STEYRMOTORS
INNOVATION WITH LIGHTNESS

84 MARINE TURBO DIESEL +SOLAS

HEATING UNIT, CIRCULATION PUMP (ACCESSORY)

60124084-0

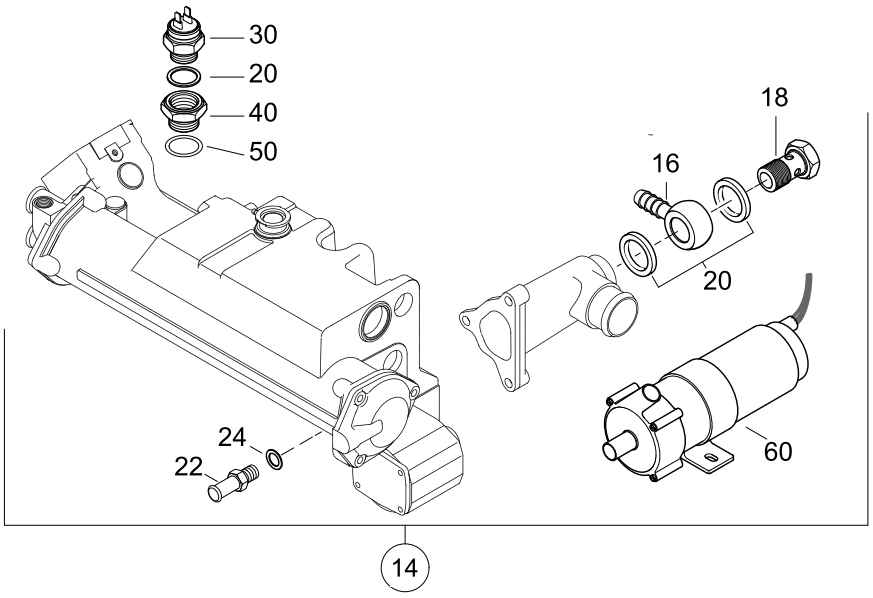

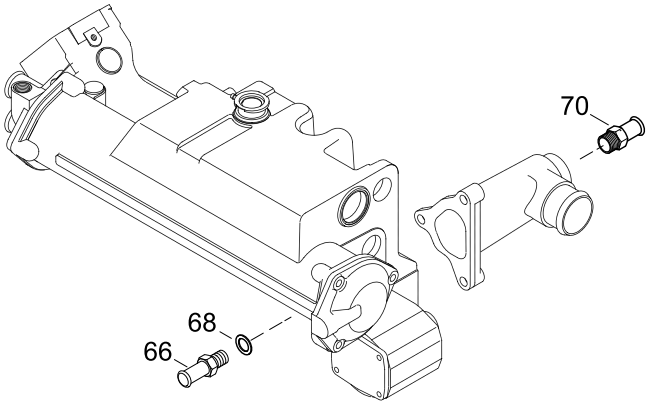

HEATING UNIT, CIRCULATION PUMP (ACCESSORY)

84 MARINE TURBO DIESEL +SOLAS

60124084-0

Pos.	Part.-No.	Qty	Designation	Step
14	2178774-2	1	HOT WATER FITT. KIT W. PU. (W/O WATER COOLED TURBO) 48219001—>	.2
16	2178770-0	1	BANJO	..3
18	9000093-0	1	HOLLOW SCREW M22x1,5 DIN 7643-18-A3C	..3
20	3098026-0	3	SEALING RING DIN 7603-A22x27-CU	..3
22	2178698-0	1	NIPPLE HEATER ON OILCOOLER	..3
24	3098013-0	1	SEALING RING DIN 7603-A12x18-CU	..3
30	2178771-0	1	THERMO SWITCH, HEATINGPUMP	..3
40	2180078-0	1	ADAPTER THERMO SWITCH	..3
50	2179242-0	1	O-RING 27x2,5	..3
60	2178772-0	1	CIRCULATION PUMP	..3
66	2178698-0	1	NIPPLE HEATER ON OILCOOLER	.2
68	3098013-0	1	SEALING RING DIN 7603-A12x18-CU	.2
70	2178607-1	1	HOSE CONNECTOR HEATER (TILL —>48218999)	.2